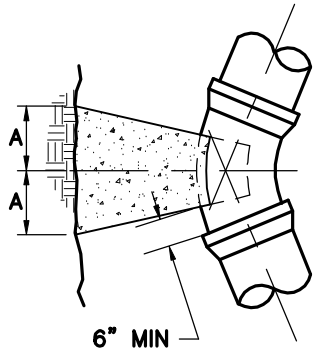

ALL BENDS

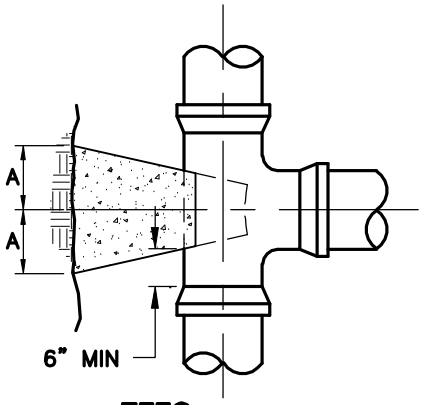

TEES

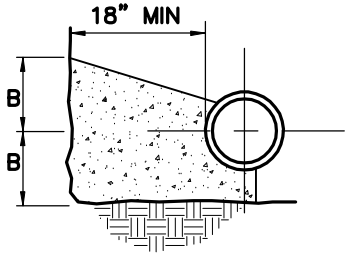

ELEVATION

NOTES

1. THRUST BLOCK SIZES SHOWN ARE BASED ON A SOIL BEARING CAPACITY OF 2000 PSF AND TEST PRESSURES OF 180 PSI.
2. POLYETHYLENE (6 mil) SHALL BE PLACED AROUND FITTINGS PRIOR TO CONCRETE PLACEMENT

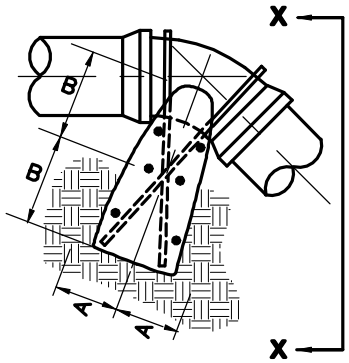

VERTICAL BENDS

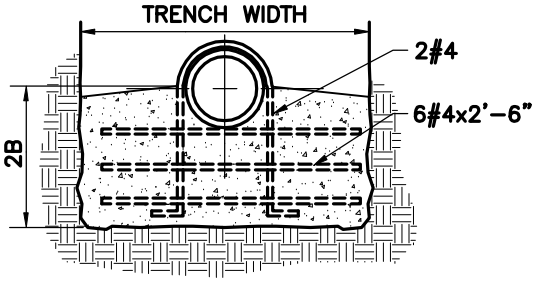

SECTION X-X

PIPE SIZE	90° BEND		45° BEND		22 1/2° BEND		11 1/4° BEND		TEE		VERTICAL BEND (DOWN)	
	A	B	A	B	A	B	A	B	A	B	A	B
6"	15"	12"	12"	9"	9"	6"	6"	6"	12"	12"	24"	21"
8"	20"	15"	14"	12"	9"	9"	9"	6"	18"	12"	33"	24"
10"	21"	21"	18"	15"	15"	9"	9"	9"	20"	18"	40"	27"
12"	27"	24"	23"	15"	15"	12"	12"	9"	25"	18"	48"	30"
16"	37"	30"	30"	21"	21"	15"	13"	12"	32"	24"	57"	36"

WATER MAIN THRUST BLOCK

NTS

DETAIL NAME: THRUST BLOCK – WATER
REFERENCE: 02616

DIVISION MGR: –
QA/QC MGR: DWS
DRAFTING MGR: RLW

FILE NAME: CIV-282
VIEWPORT SCALE: 1/1XP