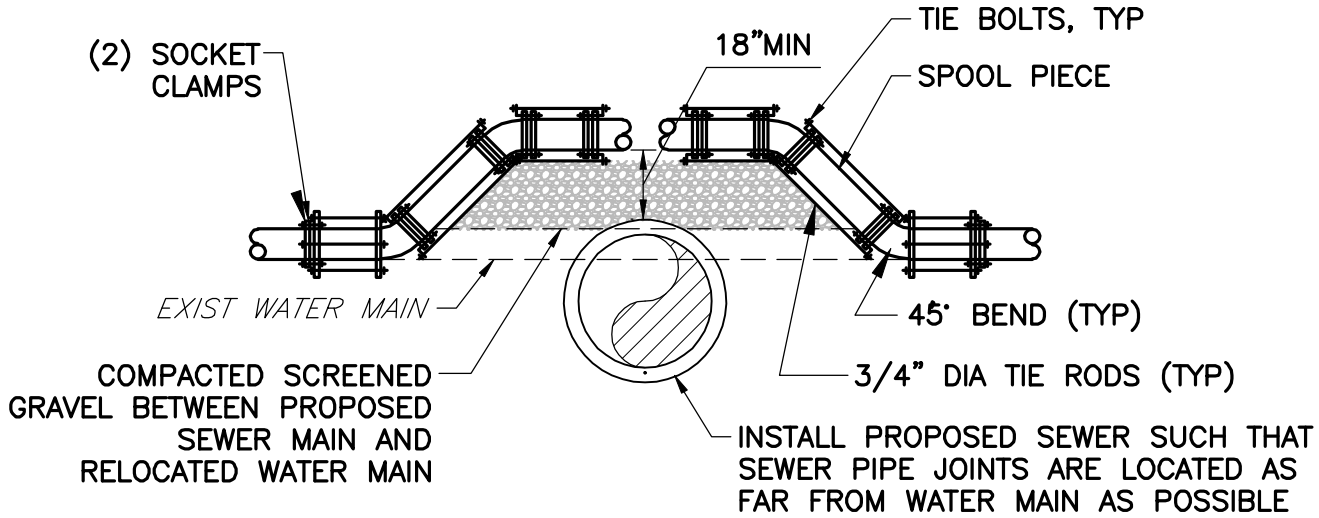

NOTES:
1. WATER MAIN MATERIALS TO BE CLASS 52 DUCTILE IRON. JOINT RESTRAINT TO BE BY MECHANICAL JOINT WITH RETAINER GLANDS, OR WITH TIE BOLTS AS SHOWN.
2. TIE RODS, TIE BOLTS, SOCKET CLAMPS AND BRIDLES SHALL BE COATED WITH A BITUMINOUS PAINT AFTER ASSEMBLY OR IF NECESSARY PRIOR TO ASSEMBLY.
3. TIE RODS: 10" DIA WATER MAIN OR LARGER – 4 REQUIRED.
   8" DIA WATER MAIN OR SMALLER – 2 REQUIRED.
4. EXISTING WATER MAINS TO BE RELOCATED OVER NEW SEWERS WHEREVER SUFFICIENT GROUND COVER EXISTS (5' MINIMUM COVER).

WATER MAIN RELOCATION

NTS

DETAIL NAME: WATER MAIN RELOCATION
REFERENCE: 02616
DIVISION MGR: –
QA/QC MGR: DWS
DRAFTING MGR: RLW
FILE NAME: CIV–280
VIEWPORT SCALE: 1/1XP