STANDARD SPECIFICATIONS

The State of New Hampshire Department of Transportation (NHDOT) Standard Specifications for Road and Bridge Construction, approved and adopted in 2010 (Standard Specifications), are made part of the Contract Documents and apply to this project.

The NHDOT specifications are hereby amended as follows:

1. Delete Division 100-General Provisions in its entirety, with the exception of:

    - Section 101 – Definitions and Terms.
    - Section 103 – Award and Execution of Contract (subsection 103.06)
    - Sections 105- Control of the Work (subsections 105.02 through 105.07 and 105.10 through 105.16)
    - Section 106- Control of the Material (subsections 106.01 through 106.07 and 106.09 through 106.10)
    - Section 109 – Measurement and Payment (subsections 109.01 and 109.11)

2. Substitute "DuBois & King, Inc. for "Engineer", "Department", "State", "Bureau of Bridge Design", "Bureau of Construction", "Bureau of Highway Design", or "Bureau of Research and Materials" or other State Department references throughout the specifications.

3. The appropriate sections of the NHDOT Standard Specifications, Division 200 to Division 700 inclusive, as referenced on the plan or in the specification, shall apply to this Project.

It is the contractor's responsibility to obtain copies of NHDOT Specifications and Plans. NHDOT Standard Specifications for Road and Bridge Construction and NHDOT Standard Plans for Road and Bridge Construction may be purchased from NHDOT, Records Sections, 7 Hazen Drive, PO Box 483, Concord, NH 03302-0483, Phone No. 603-271-3514. NHDOT Standard Specifications and Standard Plans can also be obtained on the NHDOT website at http://nh.gov/dot/business/engineers.htm.

SUPPLEMENTAL SPECIFICATIONS

The following Supplemental Specifications, to be used in conjunction with the NHDOT Standard Specifications, are provided herein and made a part of the Contract Documents and apply to this project.

Section Number	Description
109	Measurement and Payment
603	Culverts and Storm Drains

604	Catch Basins, Drop Holes and Manholes
608	Detectable Warning Devices
614	Electrical Conduit
618	Uniformed Officers and Flaggers
628	Sawed Pavement
632	Retroreflective Pavement Markings
645	Erosion Control
698	Field Facilities

SPECIAL PROVISIONS

The following Special Provisions, to be used in conjunction with NHDOT Standard Specifications, are provided herein and made a part of the Contract Documents and apply to this project.

Section Number	Item Number	Item Description
608	608.441	Concrete Sidewalks (fiber reinforced)
608	608.442	Exposed Aggregate Concrete Sidewalks
608	608.5	Brick Sidewalk with Accent Strip
608	608.6	Modular Pavers
616	616.201	Rectangular Rapid Flashing Beacons
665	665.2	Pedestrian LED Light Fixtures
665	665.3 and 665.4	LED Luminaire Conversion (Street and Pedestrian)

SECTION 01018 - ITEMS PROVIDED BY OWNER

PART 1 - GENERAL

1.01 DESCRIPTION

A. This Section defines items provided by Owner and Contractor's limitations in their use.

1.02 LANDS AND EASEMENTS

A. Owner has acquired, or will furnish, the lands and permanent and temporary easements as delineated on the Drawings on file in the Owner's office. Such acquisitions will be paid for by Owner.

B. Prior to the start of Work, Contractor's qualified surveyor shall locate the limiting boundaries of the temporary and permanent easements and of the lands owned by Owner. No construction activity, access, storage, or other use shall take place beyond these limiting boundaries.

C. The permanent easements have been provided for the installation of the Work. The temporary easements are provided for the convenience of Contractor for purposes of access, storage and to provide space for the proper installation of the Work. The installation of permanent Work within a temporary easement is not permitted.

1.03 LAND AND EASEMENT ACQUISITIONS BY CONTRACTOR

A. Should Contractor require additional lands for access, storage, maneuvering, temporary construction facilities or for any other temporary purpose, he shall purchase the land, secure a temporary easement or, as a minimum, secure written authorization of the owner(s) of the land(s) and file a copy of same with Engineer prior to using such land.

B. Should a permanent installation be made by Contractor which is not within Owner's land or within a permanent easement, as required, Contractor shall immediately notify Engineer and advise him of Contractor's proposed corrective action to be taken. If Contractor requests approval to maintain the Work where installed, and Engineer determines that such location is acceptable for the proper performance and functioning of the Project as a whole, Contractor with Owner’s permission shall purchase the additional land in the name of Owner or acquire a permanent easement for Owner. All such deeds and easement papers must receive Owner's approval prior to execution. If such lands or easements cannot be secured

by Contractor, the Work shall be removed and relocated to the location shown on the Drawings.

C. Contractor shall bear all costs associated with this Paragraph 1.03, including those sustained by Owner for legal fees, additional engineering services and other related expenses.

1.04 SUBSURFACE EXPLORATIONS

A. NOT USED

1.05 PERMITS

A. See Division 00800 Supplementary Conditions, Paragraph SC-7.08 for listing of permits Owner has applied for or obtained for this project.

END OF SECTION

SECTION 01300 - SUBMITTALS

PART 1 - GENERAL

1.01 DESCRIPTION

A. This Section generally describes the types of submittals required during construction; procedures for making submittals, the preparation of submittals and the times submittals are required.

B. Additional submissions are required by the Instructions to Bidders and the General Conditions. Such submittals generally include such things as Bids and Bidding Documents, insurance policies, certifications of bond and insurance coverage, Applications for Payment, requests for Change Orders, guarantees, permits, certifications and documents required by Federal, State and Local authorities, submissions required by utility companies and other persons, firms or organizations and other such submittals.

C. The requirements of this Section are general in nature and basically apply to all Sections of the Specifications. Additional submissions and more specific requirements on submissions are contained in the various Specification Sections. In each individual Section, no attempt was made to cover or repeat the submissions contained in this Section and, therefore, the total of all submissions required are the combinations of those described in this Section plus those specified in the various other Sections.

1.02 IDENTIFICATION OF SUBMITTALS

A. Completely identify each submittal and resubmittal by showing at least the following information (attached form may be used):

1. Name of Project.

2. Name, address and telephone number of Contractor and Contractor's stamp of approval, indicating that the submission has been thoroughly checked by Contractor for conformance and fit.

3. Name, address and telephone number of individual, firm or organization who will be doing the fabrication, supplying or manufacturing of equipment and materials and the name of the individual who may be contacted for further information.

4. Drawing number and Specification Section number to which submittal applies.

5. The location, service, equipment designation and other information to specifically indicate the item for which acceptance is requested.

6. Whether it is an original submittal (first submission) or a resubmittal (second, third, etc., submission).

Submissions not containing the above will be returned to Contractor, unreviewed by Engineer.

1.03 COORDINATION OF SUBMITTALS

A. Prior to submitting to Engineer, fully coordinate all interrelated work. As a minimum, do the following:

1. Determine and verify all field dimensions and conditions, materials, catalog numbers and similar data.

2. Coordinate with all trades, subcontractors, other contractors, public agencies, and utility companies and secure all necessary approvals, in writing.

3. Clearly indicate any deviations from the Contract Documents.

B. Make submittals in groups containing all associated items, which in some way depend upon each other. This also applies to color charts, as one color may not be able to be selected without the selection of other colors so as to form a color coordinated group. Engineer may elect not to review partial, incomplete submissions, whereupon he will return the incomplete submission to the Contractor for a resubmission of a complete submittal.

1.04 TIMING OF SUBMITTALS

A. Except where otherwise specifically noted, allow fifteen (15) days, after receipt by Engineer, for Engineer to review and process submittals. Make submittals far enough in advance of scheduled dates of installation to provide time for reviews, for securing necessary acceptance, for possible revisions and resubmittals, and for placing orders and securing delivery.

B. Submissions may be returned unreviewed, rejected for several reasons, accepted conditioned upon submission of related items or for other reasons set forth in the Contract Documents.

C. Make submissions well in advance as the returning or rejecting of submissions or other similar circumstances are possible and are deemed "avoidable delays" as defined in the General Conditions. Costs for these delays or those attributed to Contractor's tardiness in making submittals shall be borne by the Contractor.

1.05 DESTINATION OF SUBMITTALS

A. Unless otherwise specified, copies of every submission shall be sent to Engineer's office as follows:

DuBois & King, Inc.
18 Constitution Drive, Ste. 8
Bedford, NH 03110

ATTN: Construction Manager

Facsimile transmissions will not be accepted.

1.06 CLARITY OF SUBMITTALS

A. All printed materials shall be neat, clean, clear and legible, and of such quality that they can be easily reproduced by normal photocopying or blueprinting machines. Copies not conforming to this paragraph may be returned to Contractor, un-reviewed.

1.07 CONTRACTOR'S APPROVAL STAMP

A. The stamp shall have the following wording: "I hereby certify that I have carefully examined the enclosed submittal(s) and have determined and verified all field measurements, construction criteria, materials, catalog numbers and similar data, coordinated the submittal(s) with other submissions and the work of other trades and contractors, and that to the best of my knowledge and belief, the enclosed submittal(s) is/are in full compliance with the Contract requirements, except as follows (enter NONE if there are no exceptions):"

B. Each copy of every submittal shall be stamped with the Contractor's approved stamp.

1.08 ENGINEER'S REVIEW

A. Engineer will review and comment on each submission conforming to the requirements of this Section. Engineer's review will be only for conformance with the design concept of the Project and will be confined to general arrangement and compliance with the Contract Documents only, and will not be for the purpose of checking dimensions, weights, clearances, fitting, tolerances, interferences, or

coordination of trades or contractors. The acceptance of a separate item does not represent acceptance of an assembly in which the item functions. Engineer's review and comments will in no way relieve Contractor of any of his responsibilities under the Contract.

B. Submittals will be marked as follows:

1. Accepted - Submittal appears to conform to Contract Documents and Contractor may proceed with ordering and installation.

2. Accepted As Corrected - Same as "Accepted," except it is accepted on the basis that the modifications or notes added to the submittal by Engineer will be complied with by Contractor.

3. Rejected, Revise and Resubmit - Submission is not acceptable and shall be revised and resubmitted by Contractor.

4. Rejected-Unacceptable - Submission is unacceptable as it does not appear to conform to the Contract Documents. A completely new submission of other equipment or different materials is required.

C. No payment will be made on any item for which a submission is required if such submission:

1. has not been made,

2. has been made but was not stamped "Accepted" by Engineer,

3. has been made and stamped "Accepted As Corrected," but Contractor has not complied with Engineer's notes marked on the submittal,

4. has been made and stamped "Accepted," but item provided does not conform to the shop drawing nor to the Contract Documents.

1.09 RESUBMISSIONS

A. Prepare new and additional submissions, make required corrections, and resubmit corrected copies until accepted. On or with resubmittals, clearly describe revisions and changes made, other than the corrections requested by Engineer, which did not appear on the previous submissions.

1.10 CONTRACTOR'S RESPONSIBILITIES

A. Engineer's acceptance of submittals shall not relieve Contractor of responsibility for any deviation from the requirements of the Contract Documents unless

Contractor has informed Engineer, in writing, of such deviation at the time of submission and Engineer has given written acceptance to the specific deviation, nor shall Engineer's acceptance relieve Contractor from responsibility for errors or omissions in the submittals.

B. No portion of the Work requiring a submission shall be commenced until the submission has been accepted by Engineer.

PART 2 - SUBMITTALS

2.01 SCHEDULE OF VALUES

A. Within fifteen days after the signing of the Agreement, submit to Engineer two (2) copies of a schedule of values of the various portions of the Work, including quantities aggregating the total Contract Price, and supported by such data to substantiate its correctness as Engineer may require. Each item in the schedule of values shall include its proper share of overhead and profit. This schedule, when accepted by Engineer, shall only be used as a basis for Contractor's Periodic Estimate. No payments will be made to Contractor until such Schedule has been submitted and accepted by Engineer.

B. On "unit price" items, the schedule of values shall contain unit prices for various stages of work, such as restoration of surfaces broken down into paved, unpaved and other types of areas to be restored.

C. On "per each" or "lump sum" items, break prices down sufficiently to provide a convenient and realistic means for determining the amount of work done during various stages of progress.

D. Where prices are not broken down sufficiently to accurately determine the value of Work completed, Engineer will estimate the value of the Work completed and will deduct some amount so as to arrive at a conservative value which will allow Owner to easily complete the Work with the unpaid balance. When the required detail in the Schedule of Values is not provided by Contractor, Contractor agrees to accept Engineer's determinations.

2.02 CERTIFICATIONS

A. Submit in triplicate certifications of compliance whenever required by the Specifications or Engineer. Certifications shall be complete and exact, they shall be properly authenticated by the written signature, in ink, of an owner, officer or duly authorized representative of the person, firm or organization issuing such certification, and they shall guarantee that the materials or equipment are in

complete conformance with the requirements of these Specifications. Submit the "Certificate of Compliance" attached hereto, or a reasonable facsimile.

2.03 CONSTRUCTION SCHEDULE

A. Within fifteen (15) days after the signing of the Agreement, submit for Engineer's and Owner's information, a construction schedule showing, in detail, the proposed sequence of the Work and the estimated date of starting and completing each stage of the Work in order to complete the Project within the Contract Time. Prepare the schedule in a manner so that the actual progress of the Work can be recorded and compared with the expected progress. Coordinate the construction schedule with the proposed schedules of other contractors, if any, engaged in work at, or adjacent to, the Project site.

B. Coordinate the Work and make every effort to maintain the construction schedule. In the event actual progress begins to lag the schedule, promptly employ additional means or methods of construction to make up the lost time.

C. Notify Engineer in writing (1) 72 hours before commencing any work at the site, (2) 4 weeks before resuming work after a winter shutdown, and (3) at least 48 hours before resuming work in the case of a temporary suspension of work.

D. Keep the construction schedule current and revise or confirm the schedule in accordance with General Conditions, Article 6.04. to accurately reflect the conditions of the Work, past progress, and anticipated future progress.

E. Prepare and submit, with Construction Schedule, a separate schedule listing dates for submission and dates reviewed shop drawings, project data and samples will be needed for each product.

2.04 SHOP DRAWINGS

A. Submit shop drawings for all fabricated work, for all manufactured items and for all other items specifically required by the Specifications. Submit each shop and layout drawing to Engineer in the form of a reproducible transparency accompanied by two (2) prints.

B. After the submittal has been reviewed and the transparency annotated, Engineer will have two blueprints made and will keep one and forward one copy to his field office. Engineer will return the transparency to Contractor.

C. Submit six copies of each standard drawing, catalog cut, or other material for which no transparency is available. If a resubmission is not required, Engineer will retain four (4) copies and return the remaining copies to Contractor to be distributed.

D. Subcontractors must submit shop drawings directly to Contractor for checking. Thoroughly check subcontractors' shop drawings for measurements, sizes of members, details, materials, and conformance with the Contract Documents, return submittals which are found to be inaccurate or in error. Do not submit to Engineer until corrections have been made.

E. Clearly show the relation of the various parts, and, where the Work depends upon field measurements, make measurements and include them on the shop drawings before submitting to Engineer.

F. Reference all submissions to clearly indicate the Specification Section, location, service and function of each particular item. Submissions for a single item, or group of related items shall be complete. When submitting manufacturers' catalogs, pamphlets or other data sheets, in lieu of prepared shop drawings, specifically identify in ink the items for which acceptance is being sought.

G. If the shop drawings contain any departures from the Contract requirements, specifically describe them in Contractor's letter of transmittal. Where such departures require revisions to layouts or structural changes to the Work as shown, Contractor shall, at his own expense, prepare and submit revised layout and structural drawings. Make drawings the same size as the Contract Drawings.

2.05 SAMPLES

A. Where required, submit sample or test specimens of materials to be used or offered for use. Samples shall be representative, in all respects, of the material offered or intended, shall be supplied in such quantities and sizes as may be required for proper examination and tests, and shall be delivered to Engineer, prepaid, along with identification as to their sources and types or grades. Submit samples well in advance of anticipated use to permit the making of tests or examinations.

B. Samples will be checked with reasonable promptness only for conformance with the design and for compliance with the information given in the Contract Documents.

C. The Work shall be in accordance with the accepted sample. The use of materials or equipment for which samples are required to be submitted for acceptance is not permitted until such acceptance has been given by Engineer.

2.06 OPERATION AND MAINTENANCE DATA

A. See section 1720.

2.07 SPARE PARTS

A. For each item, provide a list of parts and supplies that are normally furnished at no extra cost or are specified to be furnished under this Contract, and a separate list of additional items which manufacturer recommends having "on hand" in order to insure efficient and proper operation for the first year of service.

2.08 INSTALLATION - APPLICATION INSTRUCTIONS

A. In addition to the installation instructions required, submit copies of all manufacturers' application instructions and turn over, to the Resident Project Representative, all printed instructions and labels, which are attached to or shipped with equipment and materials. These documents are, in many cases, valuable to Owner in his operation and maintenance program.

2.09 COLORS - PATTERNS

A. Unless the precise color and pattern are specified, whenever a choice of color or pattern is available in a specified product, submit accurate color and pattern charts for Engineer's and Owner's review and selection.

B. Unless all available colors and patterns have identical costs and identical wearing capabilities, and are identically suited for the installation, completely describe the relative costs and capabilities of each.

2.10 MANUFACTURER'S SERVICE STATIONS

A. The product of a manufacturer who does not maintain an adequate service station and a sufficient stock of spare parts in a reasonable vicinity of the project, is subject to rejection by Engineer solely on that basis. With each submission, submit information on manufacturer's facilities and give complete details of their service policies and capabilities, and a general idea of the stock of spare parts available.

2.11 TEST RESULTS AND INSTALLATION

A. The Owner shall provide his own materials testing agency.

B. Whenever tests are performed by the Contractor or a Testing Agency employed by the contractor, such tests shall be performed and two (2) copies of the test results submitted to Engineer. Do not deliver to the Project or incorporate into the Work any materials or equipment for which Engineer has not issued a written acceptance of the required tests and test results.

PART 3 - EXECUTION

3.101 SUBMITTALS

A. The Contractor shall provide to the Engineer product data, shop drawing, samples, Certificates of Compliance and other submittals to the Engineer as indicated in the submittal summary provided in this section. The summary provided is not all-inclusive and does not relieve the contractor from providing all submittals identified or call for elsewhere in the Contract Documents (plans and specifications).

B. Product Data
Submit the following product data:

Specification Section	Item
NHDOT 603	Drainage Pipe
NHDOT 604	Drainage Structure
NHDOT 604	Frame, Grates and Covers
NHDOT 608	Detectable Warning Device
NHDOT 615	Traffic Signage
NHDOT 615	Traffic Signage – Breakaway Mount
NHDOT 616	Rectangular Rapid Flashing Beacon
NHDOT 632	Pavement Marking Symbol - Sharrow
NHDOT 645	Erosion Control Measures
NHDOT 665	Pedestrian LED Light Fixtures
NHDOT 665	Pedestrian/Street LED Light Fixture Conversion
NHDOT 708	Paints - Material Cut Sheets
NA	Cantilever Deck Ornamental Fence

C. Shop Drawings
Submit shop drawings for the following:

Specification Section	Item
NHDOT 520	Cantilever Deck
NHDOT 615	Traffic Signage – Breakaway Mount Base
NHDOT 615	Traffic Signage – U-Post Base
NHDOT 619	Maintenance of Traffic – Traffic Control Plan
NHDOT 645	Storm Water Pollution Prevention Plan (SWPPP)

D. Samples
Submit samples of the following:

Specification Section	Item
NHDOT 304	Aggregate Base Course (Sand, Bankrun Gravel and Crushed Gravel)

NHDOT 608	Modular Pavers

E. Design Data
Submit design data of the following:

Specification Section	Item
NHDOT 401	Bituminous Concrete Design Mix
NHDOT 520	Portland Cement Concrete Design Mix

F. Test Reports
Submit test reports of the following:

Specification Section	Item
Not Applicable	

G. Certificates
Submit certificates of compliance on the following:

Specification Section	Item
Not Applicable	

H. Manufacturer's Instructions
Submit manufacturer's instructions on the following:

Specification Section	Item
NHDOT 616	Rectangular Rapid Flashing Beacon

I. Warranties
Submit manufacturer's warranties on the following:

Specification Section	Item
Not Applicable	

J. Other Submittals

Specification Section	Item
00700, 2.05 – A	Progress Schedule
00700, 2.05 – A.2	List of Submittals
01700, 1.06	Closeout Procedures
01720, 1.02	Record Documents

END OF SECTION

SECTION 01400 - QUALITY REQUIREMENTS

PART 1 - GENERAL

1.01 SECTION INCLUDES

A. References and standards.

B. Quality assurance submittals.

C. Mock-ups.

D. Control of installation.

E. Tolerances.

F. Testing and inspection services.

G. Manufacturers' field services.

1.02 RELATED SECTIONS

A. Document 00700 - General Conditions: Inspections and approvals required by public authorities.

B. Section 01300 - Administrative Requirements: Submittal procedures.

C. Section 01600 - Product Requirements: Requirements for material and product quality.

1.03 REFERENCES

A. ASTM C 1021 - Standard Practice for Laboratories Engaged in Testing of Building Sealants; 2001.

B. ASTM C 1077 - Standard Practice for Laboratories Testing Concrete and Concrete Aggregates for Use in Construction and Criteria for Laboratory Evaluation; 2006a.

C. ASTM C 1093 - Standard Practice for Accreditation of Testing Agencies for Unit Masonry; 2006.

D. ASTM D 3740 - Standard Practice for Minimum Requirements for Agencies Engaged in the Testing and/or Inspection of Soil and Rock as Used in Engineering Design and Construction; 2004a.

E. ASTM E 329 - Standard Specification for Agencies Engaged Construction Inspection and/or Testing; 2007.

F. ASTM E 543 - Standard Specification for Agencies Performing Nondestructive Testing; 2006.

1.04 SUBMITTALS

A. Testing Agency Qualifications:
   1. Not Used.

B. Design Data: Submit for Engineer's knowledge as contract administrator for the limited purpose of assessing conformance with information given and the design concept expressed in the contract documents, or for Owner's information.

C. Certificates: When specified in individual specification sections, submit certification by the manufacturer and Contractor to Engineer, in quantities specified for Product Data.
   1. Indicate material or product conforms to or exceeds specified requirements. Submit supporting reference data, affidavits, and certifications as appropriate.
   2. Certificates may be recent or previous test results on material or product, but must be acceptable to Engineer.

D. Manufacturer's Instructions: When specified in individual specification sections, submit printed instructions for delivery, storage, assembly, installation, adjusting, and finishing, for the Owner's information. Indicate special procedures, perimeter conditions requiring special attention, and special environmental criteria required for application or installation.

E. Manufacturer's Field Reports: Submit reports for Engineer's benefit as contract administrator or for Owner.
   1. Submit report within 30 days of observation to Engineer for information.
   2. Submit for information for the limited purpose of assessing conformance with information given and the design concept expressed in the contract documents.

F. Erection Drawings: Submit drawings for Engineer's benefit as contract administrator or for Owner.
   1. Submit for information for the limited purpose of assessing conformance with information given and the design concept expressed in the contract documents.
   2. Data indicating inappropriate or unacceptable Work may be subject to action by Engineer or Owner.

1.05 REFERENCES AND STANDARDS

A. For products and workmanship specified by reference to a document or documents not included in the Project Manual, also referred to as reference standards, comply with requirements of the standard, except when more rigid requirements are specified or are required by applicable codes.

B. Conform to reference standard of date of issue current on date of Agreement, except where a specific date is established by applicable code.

C. Obtain copies of standards where required by product specification sections.

D. Maintain copy at project site during submittals, planning, and progress of the specific work, until Substantial Completion.

E. Should specified reference standards conflict with Contract Documents, request clarification from Engineer before proceeding.

F. Neither the contractual relationships, duties, or responsibilities of the parties in Contract nor those of Engineer shall be altered from the Contract Documents by mention or inference otherwise in any reference document.

1.06 TESTING AND INSPECTION AGENCIES

A. Owner will employ and pay for services of an independent testing agency to perform other specified testing.

B. Employment of agency in no way relieves Contractor of obligation to perform Work in accordance with requirements of Contract Documents.

PART 2 – PRODUCTS - NOT USED

PART 3 - EXECUTION

3.01 CONTROL OF INSTALLATION

A. Monitor quality control over suppliers, manufacturers, products, services, site conditions, and workmanship, to produce Work of specified quality.

B. Comply with manufacturers' instructions, including each step in sequence.

C. Should manufacturers' instructions conflict with Contract Documents, request clarification from Engineer before proceeding.

D. Comply with specified standards as minimum quality for the Work except where more stringent tolerances, codes, or specified requirements indicate higher standards or more precise workmanship.

E. Have Work performed by persons qualified to produce required and specified quality.

F. Verify that field measurements are as indicated on shop drawings or as instructed by the manufacturer.

G. Secure products in place with positive anchorage devices designed and sized to withstand stresses, vibration, physical distortion, and disfigurement.

3.02 MOCK-UPS

A. Tests will be performed under provisions identified in this section and identified in the respective product specification sections.

B. Assemble and erect specified items with specified attachment and anchorage devices, flashings, seals, and finishes.

C. Accepted mock-ups shall be a comparison standard for the remaining Work.

D. Where mock-up has been accepted by Engineer and is specified in product specification sections to be removed, remove mock-up and clear area when directed to do so.

3.03 TOLERANCES

A. Monitor fabrication and installation tolerance control of products to produce acceptable

Work. Do not permit tolerances to accumulate.

B. Comply with manufacturers' tolerances. Should manufacturers' tolerances conflict with Contract Documents, request clarification from Engineer before proceeding.

C. Adjust products to appropriate dimensions; position before securing products in place.

3.04 TESTING AND INSPECTION

A. See individual specification sections for testing required.

B. Testing Agency Duties:
   1. Test samples of mixes submitted by Contractor.
   2. Provide qualified personnel at site. Cooperate with Engineer and Contractor in performance of services.
   3. Perform specified sampling and testing of products in accordance with specified standards.
   4. Ascertain compliance of materials and mixes with requirements of Contract Documents.
   5. Promptly notify Engineer and Contractor of observed irregularities or non-conformance of Work or products.
   6. Perform additional tests and inspections required by Engineer.
   7. Attend preconstruction meetings and progress meetings.
   8. Submit reports of all tests/inspections specified.

C. Limits on Testing/Inspection Agency Authority:
   1. Agency may not release, revoke, alter, or enlarge on requirements of Contract Documents.
   2. Agency may not approve or accept any portion of the Work.
   3. Agency may not assume any duties of Contractor.
   4. Agency has no authority to stop the Work.

D. Contractor Responsibilities:
   1. Deliver to agency at designated location, adequate samples of materials proposed to be used which require testing, along with proposed mix designs.
   2. Cooperate with laboratory personnel, and provide access to the Work.
   3. Provide incidental labor and facilities:
      a. To provide access to Work to be tested/inspected.
      b. To obtain and handle samples at the site or at source of Products to be tested/inspected.
      c. To facilitate tests/inspections.
      d. To provide storage and curing of test samples.
   4. Notify Engineer and laboratory 24 hours prior to expected time for operations requiring testing/inspection services.
   5. Employ services of an independent qualified testing laboratory and pay for additional samples, tests, and inspections required by Contractor beyond specified requirements.

E. Re-testing required because of non-conformance to specified requirements shall be performed by the same agency on instructions by Engineer.

F. Re-testing required because of non-conformance to specified requirements shall be paid for by Contractor.

3.05 MANUFACTURERS' FIELD SERVICES

A. When specified in individual specification sections, require material or product suppliers or manufacturers to provide qualified staff personnel to observe site conditions, conditions of surfaces and installation, quality of workmanship, as applicable, and to initiate instructions when necessary.

B. Report observations and site decisions or instructions given to applicators or installers that are supplemental or contrary to manufacturers' written instructions.

3.06 DEFECT ASSESSMENT

A. Replace Work or portions of the Work not conforming to specified requirements.

B. If, in the opinion of Engineer, it is not practical to remove and replace the Work, Engineer will direct an appropriate remedy or adjust payment.

END OF SECTION

SECTION 01500 - TEMPORARY FACILITIES AND CONTROLS

PART 1 GENERAL

1.01 SECTION INCLUDES

A. Temporary utilities.

B. Temporary telecommunications services.

C. Temporary sanitary facilities.

D. Temporary Controls: Barriers, enclosures, and fencing.

E. Security requirements.

F. Vehicular access and parking.

G. Waste removal facilities and services.

H. Field offices.

1.02 TEMPORARY UTILITIES

A. Provide and pay for all electrical power, lighting, and water required for construction purposes.

B. Existing facilities may not be used.

C. New permanent facilities may not be used.

D. Use trigger-operated nozzles for water hoses, to avoid waste of water.

1.03 TELECOMMUNICATIONS SERVICES

A. Provide, maintain, and pay for telecommunications services to field office at time of project mobilization.

B. Provide equivalent equipment and connections for Engineer's field office.

C. Telecommunications services shall include:
   1. Windows-based personal computer dedicated to project telecommunications, with necessary software and laser printer.
   2. Telephone Line: One line, minimum; one handset per line.
   3. Internet Connections: Minimum of one; Cable modem or faster.
   4. Email: Account/address reserved for project use.
   5. Facsimile Service: Minimum of one dedicated fax machine/printer.
   6. Alternate Facsimile Service: Fax-to-email software on personal computer with printer/scanner.

1.04 TEMPORARY SANITARY FACILITIES

A. Provide and maintain required facilities and enclosures. Provide at time of project mobilization.

B. Use of existing facilities is not permitted.

C. New permanent facilities may not be used during construction operations.

D. Maintain daily in clean and sanitary condition.

E. At end of construction, return facilities to same or better condition as originally found.

1.05 BARRIERS

A. Provide barriers to prevent unauthorized entry to construction areas and to protect existing facilities and adjacent properties from damage from construction operations and demolition.

B. Provide protection for plants designated to remain. Replace damaged plants.

C. Protect non-owned vehicular traffic, stored materials, site, and structures from damage.

1.06 FENCING

A. Construction: Contractor's option.

1.07 SECURITY

A. Provide security and facilities to protect Work, and Owner's operations from unauthorized entry, vandalism, or theft.

B. Coordinate with Owner's security program.

1.08 VEHICULAR ACCESS AND PARKING

A. Coordinate access and haul routes with governing authorities and Owner.

B. Provide and maintain access to fire hydrants, free of obstructions.

C. Provide means of removing mud/dust/debris from vehicle wheels before entering streets.

D. Existing on-site roads may be used for construction traffic.

E. Provide temporary parking areas to accommodate construction personnel. When site space is not adequate, provide additional off-site parking.

1.09 WASTE REMOVAL

A. Provide waste removal facilities and services as required to maintain the site in clean and orderly condition.

B. Provide containers with lids. Remove trash from site periodically.

C. If materials to be recycled or re-used on the project must be stored on-site, provide suitable non-combustible containers; locate containers holding flammable material outside the structure unless otherwise approved by the authorities having jurisdiction.

D. Open free-fall chutes are not permitted. Terminate closed chutes into appropriate containers with lids.

1.10 FIELD OFFICES

A. Contractor's Option.

B. Office: Weathertight, with lighting, electrical outlets, and equipped with sturdy furniture.

C. Provide space for Project meetings, with table and chairs to accommodate 4 persons.

D. Locate offices a minimum distance of 30 feet (10 m) from existing and new structures.

E. See Specification

1.11 REMOVAL OF UTILITIES, FACILITIES, AND CONTROLS

A. Remove temporary utilities, equipment, facilities, materials, prior to Final Application for Payment inspection.

B. Remove underground installations to a minimum depth of 2 feet (600 mm). Grade site as indicated.

C. Clean and repair damage caused by installation or use of temporary work.

D. Restore existing facilities used during construction to original condition.

E. Restore new permanent facilities used during construction to specified condition.

PART 2 PRODUCTS - NOT USED

PART 3 EXECUTION - NOT USED

END OF SECTION

SECTION 01600 - MATERIAL AND EQUIPMENT

PART 1 - GENERAL

1.01 DESCRIPTION

A. This Section covers general requirements for products and the criteria, which must be met by Contractor when he desires to utilize substitute products. In order to determine the total requirements of each Specifications Section, this Section shall be used in conjunction with all other Sections and the requirements contained herein shall be in addition to the requirements set forth in all other Sections.

1.02 QUALITY ASSURANCE

A. In addition to Contractor's warranties and guarantees on materials and equipment required under the General Conditions, Contractor is solely responsible to see that all materials, equipment, products and the finished Work complies accurately and completely with the Contract Documents. Contractor should test and inspect all materials and items of Work prior to ordering and installation, to satisfy himself that all Contract requirements are being met.

B. The Engineer may check all or any portion of the Work and Contractor shall afford all necessary assistance to Engineer in carrying out such checks. Such checking by Engineer shall not relieve Contractor of any responsibilities for the accuracy or completeness of the Work.

C. If witnessed shop tests or inspections are required at the point of manufacture, Contractor shall keep Engineer advised as to the progress of the Work so that he may arrange for inspection at the proper time and place.

D. Should any dispute arise as to the quality or fitness of workmanship, equipment, materials or articles, the decision shall rest with Engineer, and shall be based upon the requirements of this Contract.

E. At the request of Engineer, Contractor shall promptly provide the services of a competent representative of the manufacturer at the Project site, fully equipped and prepared to answer questions, perform tests, make adjustments and to prove compliance with the Specifications.

1.03 SUBMITTALS

A. Within 10 days after formal execution of the Contract, submit in accordance with Paragraph 2.01.F, a complete products list and formal request for substitution of products and methods of construction.

B. Promptly submit guarantees set forth in Paragraph 1.05 and other materials required in Section 01300 and all other Sections.

1.04 DELIVERY, STORAGE AND HANDLING

A. The general transportation, storage and handling of materials and equipment shall conform to the recommendations of the manufacturer furnishing the item and the requirements of the Specifications. All of the items of Work shall be carefully handled and protected to avoid damage or disfiguration. Deliver materials and equipment in manufacturers' crates and containers.

B. Store equipment and materials at the Project site in conformity to applicable statutes, ordinances, regulations and rulings of proper public authority. Do not unnecessarily store materials or equipment on the Project site and take care to prevent any structure from being loaded with a weight, which will endanger its security or the safety of persons.

C. Materials stored upon streets or roads shall be placed so as to cause minimum obstruction to traffic and to the public. Do not place materials within ten feet of fire hydrants. Keep gutters, swales and drainage inlets unobstructed at all times. Do not store materials nor encroach upon private property without the written consent of the owners of such private property.

D. Store materials so as to ensure the preservation of their quality and fitness and store in a manner, which will allow prompt and proper inspection.

E. Do not permit materials not complying with the requirements of the Contract to be brought onto or to be stored at the Project site. Immediately remove from the Project site all non-complying materials and equipment and replace them with items which are in full compliance.

F. Delivery of all materials to the site or removal of spoil, garbage, debris and other materials from the site shall be done in a manner which will not cause any nuisance or allow spillage of materials from the transporting vehicles.

1.05 GUARANTEES

A. Whenever a manufacturer, supplier or other person, or firm furnishes, offers to furnish or normally furnishes a guarantee, whether required by the Specifications

or not and no matter how long the guarantee period is, Contractor shall accept or secure all such guarantees and furnish same to Engineer. Contractor shall also fill out and send to manufacturers all warranty and guarantee documents required by them in order to affect such warranties and guarantees, with a copy to Owner.

1.06 CONTRACTOR'S OPTIONS

A. For products specified only by reference standards, select any product meeting standards, by any manufacturer.

B. For products specified by naming several products or manufacturers, select any product and manufacturer named.

C. For products specified by manufacturer and model or catalog number, but indicating the option by naming equivalent manufacturer or stating "or equal" after the specified product, Contractor must submit for substitution for any product not specifically named.

D. Products specified by naming only one product and manufacturer, there is no option, and no substitution will be allowed.

PART 2 - PRODUCTS

2.01 MATERIALS AND EQUIPMENT

A. All materials, equipment and accessories shall be new and unused and shall be essentially the standard product of a manufacturer of established good reputation and regularly engaged in the production and fabrication of such material or equipment. All equipment shall be current modifications, which have been in successful regular operation under comparable conditions for a period of at least five years. This time requirement does not apply to minor details nor to thoroughly demonstrated improvements in design or in material or construction. Further, equipment not meeting the time requirement may be considered when the manufacturer is willing to provide a Performance Bond for the duration of the time period which will guarantee replacement of the equipment installed at no cost to the Owner in the event of failure. The Engineer shall be the final judge of the terms and condition of the Performance Bond.

B. Owner reserves the right to reject any material or equipment manufacturer who, although he appears to be qualified and meets the technical requirements, does not provide satisfactory evidence indicating adequate and prompt post-installation repair and maintenance service, as required to suit the operational requirements of Owner.

C. Whenever it is required that Contractor shall furnish materials or manufactured articles or shall do work for which no detailed specifications are set forth, the materials or manufactured articles shall be of the best grade in quality and workmanship obtainable on the market from firms of established good reputation, or, if not ordinarily carried in stock, shall conform to the usual standards for first-class materials or articles of the kind required. Perform Work in full conformity and harmony with the intent to secure the best standard of construction and equipment of the Work as a whole or in part.

D. Items of any one type of material or equipment shall be the product of a single manufacturer. For ease of Owner in maintaining and obtaining service for equipment and for obtaining spare parts from as few places as possible, to the maximum extent possible, use equipment of a single manufacturer. The Engineer reserves the right to reject any equipment from various manufacturers if suitable equipment can be secured from fewer manufacturers and to require that source of materials be unified to the maximum extent possible.

E. It is mandatory that all electrical, mechanical and other equipment requiring spare parts and servicing shall be supplied only by manufacturers who maintain adequate service stations and sufficiently stock spare parts in a reasonable vicinity of the Project. The Engineer reserves the right to reject all manufacturers not meeting the requirements of this paragraph.

F. Prepare a complete products list of all products proposed for installation. Tabulate list by each specification section and include name and address of manufacturer/supplier, trade name, and model or catalog designation.

2.02 NAMEPLATES

A. Each unit of equipment shall have the manufacturer's name or trademark on a corrosion-resistant nameplate securely affixed in a conspicuous place. The manufacturer's name or trademark may be cast integrally with stamp, or otherwise permanently marked upon the item of equipment. Such other information as the manufacturer may consider necessary for complete identification shall be shown on the nameplate.

2.03 FABRICATIONS

A. Insofar as possible, shop prefabricate all items complete and ready for installation. Accurately fabricate all items to the details shown on the Drawings and on the accepted shop drawings.

2.04 SPARE PARTS

A. For each item, provide a list of parts and suppliers that are normally furnished at no extra cost or are specified to be furnished under this Contract, and a separate list of additional items which manufacturer recommends having "on hand" in order to insure efficient and proper operation for the first year of service.

2.05 SUBSTITUTIONS

A. Names - The Drawings and Specifications list acceptable manufacturers, commercial names, trademarks, brands and other product, material and equipment designations. Certain items of equipment or products specified herein and the related portions of work indicated on the Drawings have been selected, established, and/or designed to perform specific functions and are deemed suitable for the service intended. These items include details relating to the materials, structural, mechanical and electrical characteristics, and the relationship of the equipment to the overall Project. The specific design features and construction characteristics of the equipment incorporated in the Contract Drawings were selected to enhance compatibility of related facilities.

B. Submissions - Should the Contractor desire to supply equipment other than that specifically incorporated in the design and/or the Contract Drawings, he must:

1. Defend the desired substitution by providing the Engineer with such information as he may request to determine the equality of the equipment proposed.

2. Reimburse the Owner for all engineering costs necessary in excess of the initial review of the submittal and determination that the substitution of equipment clause applies. Such costs may relate to field trips, testing of materials, use of laboratory facilities, test result analysis, and revisions to the Contract Drawings, as necessary to incorporate equipment if accepted for substitution.

3. Pay all increases in construction or related cost necessitated by the substitution.

4. If requested, provide a performance bond from the manufacturer in the amount of the value of the installed equipment for a period of up to five years. Such protection shall be in addition to other provisions and shall assure replacement of any equipment defective in workmanship, materials, or performance, at no cost to the Owner. Terms and conditions of such a bond shall be as determined by the Owner.

C. Use of Substitutes - A Contractor wishing to proceed under this provision for Substitution of Equipment, must adhere to the procedure which follows:

1. The Contractor shall submit a written request for Substitution of Equipment, shall fully identify the Substitution desired, and specifically acknowledge acceptance of the responsibilities noted above in Paragraph 2.05, B. Submissions, 1 through 4.

2. The Contractor shall submit the following items to the Engineer <u>at the time he presents the request for Substitution of Equipment</u>.

   a. Sufficient design information to fully describe the proposed equipment, including literature, photographs, typical drawings, etc., as required.

   b. Specific performance data, such as characteristic curves or charts, specifications, and descriptions which relate to design criteria normally applicable to the particular type of equipment. As a minimum, values shall include reference to the stated design conditions, efficiencies, brake horsepower, and installed horsepower.

   c. Specific information pertaining to the mechanical design of the equipment. The data shall include, but not necessarily be limited to the following, as applicable: motors, gear units, service factors, lubrication system(s), design information (torque, bending moment, and weight), equipment support design, variable speed drives, bearings, ventilation requirements, and connected pipe sizes.

   d. A list of current installations fully operating in comparable climatic conditions, including location, size and type of installation and treatment process, actual operating data including input and output parameters and overall performance, Owner's name, and the name, address, and telephone number of an Owner's representative who is fully familiar with the installation. The facilities shall have a minimum of five years operating experience. The Owner may accept a performance bond as specified in paragraph 2.05 B.4 of this section in lieu of the five-year operating experience.

   e. A brief description of operation procedures and maintenance requirements.

   f. Estimated operating costs, power requirements, motor sizes for proposed installation.

g. A statement listing the advantages and savings or additional cost involved to the Owner.

h. Any amplification or clarification of other information as may be required by the Engineer.

D. Determination of Equals - If the Engineer determines the Contractor's initial request for substitution of equipment is incomplete or that additional information is required to judge the equality of the proposed substitution, the Contractor shall submit such information upon request by the Engineer. If the Contractor fails to supply such information within a reasonable time period as specified by the Engineer in his written request, the Engineer may determine that the Contractor's request for substitution of equipment is incomplete and not acceptable, in which case the equipment as specified in the Contract Drawings shall be provided in order to avoid undue delay in timely completion of the Project.

PART 3 - EXECUTION

3.01 INSPECTIONS - PREPARATIONS

A. Prior to work under any Section, carefully inspect the Work of all other trades and verify that all such Work is in conformance with the Contract Documents and is complete to the point where the Work under that Section may properly commence. Extreme care shall be exercised so as to avoid the need to remove and replace Work and to avoid unnecessary cutting and patching.

B. Inspect all surfaces to be sure that they have been properly prepared before applying new Work to such surfaces.

C. Make all required measurements in the field to ensure proper and adequate fit of all items.

D. Verify that all Work can be installed in strict accordance with the Drawings and the accepted shop drawings. Immediately report discrepancies to Engineer.

E. Do not proceed with the Work under any Section until conditions are proper.

3.02 INSTALLATION/APPLICATION/PERFORMANCE/ERECTION

A. All materials and equipment shall be applied, installed, connected, erected, used, cleaned and conditioned in accordance with the instructions of the applicable manufacturer, fabricator or processors, except as otherwise provided in the Contract Documents.

B. All Work shall be done in a workmanlike manner and set to proper lines and grades.

C. Where performance criteria are specified, do all Work necessary to attain the required end results.

3.03 FIELD QUALITY CONTROL

A. Neither observations by Engineer nor inspections, tests or approvals by other persons shall relieve Contractor from his obligations to perform the Work in accordance with the requirements of the Contract Documents.

B. If the Contract Documents, laws, ordinances, rules, regulations or orders of any public authority having jurisdiction require any Work to specifically be inspected, tested or approved by some public body, Contractor shall assume full responsibility therefor, pay all costs in connection therewith and furnish Engineer the required certificates of inspection, testing or approval.

C. The Owner reserves the right to independently perform laboratory tests at the Owner's costs on random samples of material or performance tests on equipment delivered to the site. These tests, if made, will be conducted in accordance with the appropriate referenced standards or Specification requirements. The entire shipment represented by a given sample, samples or piece of equipment may be rejected on the basis of the failure of samples or pieces of equipment to meet specified test requirements. All rejected materials or equipment shall be removed from the site, whether stored or installed in the Work, and the required replacements shall be made, all at no additional cost to Owner.

3.04 ADJUST AND CLEAN

A. Upon the completion of installations, and as a condition of its acceptance, visually inspect all Work, adjust all components for proper alignment and use and touch-up all abrasions and scratches to make them completely invisible.

B. Keep the site in a neat, safe and orderly condition at all times and free from accumulations of debris, excess materials, garbage, unsightly materials, spoil materials and materials of like character.

C. Thoroughly examine all materials and equipment with protective or decorative finishes for defects and damage prior to being covered. In the case of buried items of Work, restore protective surface covers so as to conform to the Contract requirements prior to being backfilled, buried or embedded, as the case may be. In the case of exposed items of Work, for which a decorative finish is required, all

scratches, discolorations, unmatched colors, disfigurations, and damages shall be repaired and touched-up so as to provide a neat, clean finish, uniform in color.

3.05 UNCOVERING WORK

A. Unless otherwise specified or directed by Engineer, no Work shall be covered until it has been inspected, tested, and authorized to be covered by Engineer. If any Work is covered without the consent of Engineer, it must, if requested by Engineer, be uncovered for his observation and replaced at Contractor's expense.

3.06 PROTECTION

A. During the progress of the Work, and up to the date of Substantial Completion, Contractor shall be solely responsible for the care and protection of all Work and materials covered by this Contract. All Work and materials shall be protected against damage or loss from any cause whatsoever and Contractor shall rebuild, replace, restore and make good all injuries, losses, damages, re-erection and repairs occasioned or rendered necessary, to all or any portions of the Work, and at Contractor's expense.

B. Neither Owner nor any of its officers, employees or agents assume any responsibility for collecting indemnity from any persons causing damage to the Work of Contractor.

3.07 DEFECTIVE WORK

A. The repair, removal, replacement and correction of defective Work is a part of this Contract and shall be promptly done in accordance with the requirements set forth in the General Conditions. All costs in connection with the correction of defective Work shall be borne by Contractor.

END OF SECTION

SECTION 01700 - PROJECT CLOSEOUT

PART 1 - GENERAL

1.01 DESCRIPTION

A. This section provides instructions to the Contractor, the Engineer, and the Owner in scheduling the sequence of events and requirements leading to final acceptance of the Project, occupancy by the Owner and the responsibilities of the respective parties.

B. Related work specified elsewhere includes:

Submittals	01300
Project Record Documents	01720

1.02 REQUIREMENTS FOR SUBSTANTIAL COMPLETION

A. The construction of the Project or a specified part thereof is sufficiently completed in accordance with the Contract Documents, so that the Project or specified part can be utilized for the purposes for which it is intended.

B. The Contractor shall:

1. Submit Project Record Drawings per requirements of Section 01720.

2. Meet other requirements of this Section and by government agencies stated elsewhere within these Contract Documents.

1.03 SUBSTANTIAL COMPLETION

NOT USED

1.04 FINAL INSPECTION

A. The Contractor is reminded that the status of Final Completion must be achieved on or before the Contract Completion Date to fully meet the conditions of this Contract.

B. The Contractor shall submit written certification that:

1. Work has been completed in accordance with Contract Documents.

2. Project is completed, and ready for final inspection.

C. If the Engineer concurs with the Contractor's Certification, the Engineer will schedule a final inspection by a representative of the Engineer, Owner, and appropriate State and Federal Agencies to occur within ten working days after receipt of the certification.

D. Should the Engineer disagree with the Contractor's certification that work is finally complete:

1. The Engineer will postpone inspection and will notify the Contractor in writing, stating the reasons.

2. The Contractor shall take immediate steps to remedy the stated deficiencies, and send second written notice to Engineer certifying that the Work is complete.

3. The Engineer will then schedule an inspection of the Work as above.

E. Should the Engineer consider that work is finally complete in accordance with requirements of the Contract Documents, he will request the Contractor to deliver the appropriate Project Closeout submittals and will prepare the Final Completion Certificate for execution by Contractor and Owner.

1.05 REINSPECTION COSTS

A. Should the Engineer be required to perform second inspections because of failure of Work to comply with original certifications of the Contractor, the Owner will compensate the Engineer for additional services, and deduct amount paid from final payment to the Contractor.

1.06 CLOSEOUT SUBMITTALS

A. Guarantees and Bonds

B. Evidence of Payments and Release of Liens

1. The Contractor shall submit:

a. Contractor's Affidavit of Payment of Debts and Claims.
b. Contractor's Affidavit indemnifying the Owner or Owner's agents harmless from all claims as stated in the General Conditions.

C. Final Periodic Estimate:

1. The Contractor shall submit final periodic estimate in accordance with requirements of General and Supplementary Conditions.

D. Meet other requirements of this section and by government agencies stated elsewhere within these Contract Documents.

1.07 FINAL CERTIFICATE OF PAYMENT

A. The Engineer will issue final certificate in accordance with provisions of General Conditions.

1.08 POST-CONSTRUCTION INSPECTION

A. Prior to expiration of one year from Date of Substantial Completion, the Engineer may make visual inspection of Project in company with Owner and Contractor to determine whether correction of Work is required, in accordance with provisions of the General Conditions.

B. For Guarantees beyond one year, the Engineer will make inspections at request of the Owner after notification to the Contractor.

C. The Engineer will promptly notify the Contractor, in writing, of any observed deficiencies, which shall be promptly corrected by the Contractor at his expense.

END OF SECTION

SECTION 01710 - CLEANING

PART 1 - GENERAL

1.01 DESCRIPTION

A. Work included:

1. Maintaining premises and public properties.

2. Final clean up.

B. Related requirements specified elsewhere:

Project Closeout	01700

1.02 QUALITY ASSURANCE

A. Maintain the Work site in a clean condition at all times.

B. Upon written notice from the Engineer to perform cleaning as specified herein, the Contractor shall have twenty-four hours to comply. If Contractor fails to comply, then Owner may perform whatever work is necessary by whatever means he may deem expedient, and all expenses incurred by Owner will be charged to and paid for by the Contractor.

1.03 SAFETY REQUIREMENTS

A. Maintain project in accordance with U.S. Department of Labor, Safety and Health Regulations, CFR 20 Part 1926 and all subsequent amendments.

B. Store volatile wastes in covered metal containers.

C. Prevent accumulations of wastes which create hazardous conditions.

D. Provide adequate ventilation during use of volatile or noxious substances.

E. Conduct cleaning and disposal operations to comply with local and state ordinances and anti-pollution laws and as approved by the Engineer.

1. Do not dispose of volatile wastes such as mineral spirits, oil, or paint thinner in storm or sanitary drains.

2. Do not dispose of wastes into streams or waterways.

PART 2 - PRODUCTS

2.01 MATERIALS

A. Use only cleaning materials recommended by manufacturer of surface to be cleaned.

B. Use cleaning materials only on surfaces recommended by cleaning material manufacturer.

PART 3 - EXECUTION

3.01 DURING CONSTRUCTION

A. Execute cleaning to ensure that building, grounds, and public properties are maintained free from accumulations of waste materials and rubbish.

B. Wet down dry materials and rubbish to lay dust and prevent blowing dust.

C. Clean site and public properties, and dispose of waste materials, debris and rubbish daily.

D. Dispose of waste materials, debris and rubbish in an acceptable manner.

E. Handle materials in a controlled manner with as few handlings as possible; do not drop or throw materials from heights.

F. Schedule cleaning operations so that dust and other contaminants resulting from cleaning process will not fall on wet, newly painted surfaces.

3.02 FINAL CLEANING

A. In preparation for substantial completion or occupancy, conduct final inspection of sight-exposed interior and exterior surfaces, and of concealed spaces.

B. Remove grease, dust, dirt, stains, labels, fingerprints, and other foreign materials, from sight-exposed interior and exterior finished surfaces.

C. Repair, patch and touch up marred surfaces to specified finish, to match adjacent surfaces.

D. Broom clean surfaces; rake clean other surfaces of grounds.

E. Remove snow and ice from building access.

F. Tear down, remove and dispose of all temporary buildings and structures as approved by the Engineer.

G. Upon removal of temporary toilet facility, remove, disinfect, and cover all organic matter as approved by the Engineer.

H. Remove all tools, equipment, machinery and surplus materials from the project.

I. Restore to a condition equal to the original condition, all portions of the site not designated for alteration and all public and private property that was damaged.

J. Maintain cleaning until project or portion thereof, is occupied by Owner.

END OF SECTION

SECTION 01720 - PROJECT RECORD DOCUMENTS

PART 1 - GENERAL

1.01 DESCRIPTION

A. Work covered by this Section includes the requirements for record documents.

B. Related work specified elsewhere includes:

Submittals	01300
Project Closeout	01700

1.02 SUBMITTALS

A. As soon as possible after the installation and completion of all Work, submit record drawings, specifications, addenda, and Shop Drawings, plus all approved field sketches and diagrams, to Engineer for his review and use in establishing a basis for final payment.

PART 2 - PRODUCTS

2.01 RECORD DRAWINGS

Blue line paper prints.

PART 3 - EXECUTION

3.01 RECORD DOCUMENTS

A. Maintain at the site, one record set of all Drawings, Specifications, Addenda, Change Orders, accepted shop drawings and accepted submittals, Field Test Records and Manufacturer's Certificate of Compliance and Test Data. Make these materials available for inspection by Engineer, Owner, regulatory agencies and other interested persons, upon request, and maintain in good, clean, current condition.

B. Keep record documents current.

C. Do not permanently conceal any work until required information has been recorded.

3.02 RECORD DRAWINGS

A. The general intent of the record drawings is to record all of the Work, pay items, and all existing obstructions, features and materials encountered in the Work so as to produce a set of drawings accurately depicting the Work as-built and existing conditions. On the record drawings, mark in red the following minimum required items at the time they occur:

1. All approved field changes and conditions.

2. The Work, as-built.

3. All utility lines and structures encountered in the Work, including size, material and elevation.

4. Streams, ditches and other watercourses.

5. Other pipes and structures encountered below ground.

6. Limits, depths, cross sections and extent of rock, unstable material and other materials encountered and for which a payment for removal will be made. Include volume removed.

7. Locations of buried pipe adapters, specialties and appurtenances.

8. Locations, ties, and elevations of ends of sewer house connections and water services installed.

9. Depths of various elements of new structure foundations in relation to first floor or top levels.

10. Changes made to interior piping systems including all pipe sizes, fittings, valving and appurtenances.

B. Locations and elevations of the Work and limits and quantities of pay items shall be accurate. Use stationing shown on the Drawings where possible but provide three ties to all underground or underwater Work which will not be visible after completion of the Work, such as ends of house connections, ends of water services, stubouts, dead-ended lines, outfall pipes, buried pipes, utilities, and similar items.

C. All existing obstructions, elevations and locations shall be reasonably accurate and direction of pipelines shall be shown approximate. Use stationing shown on Drawings.

3.03 SPECIFICATIONS AND ADDENDA

A. Legibly mark up each Section to record:

1. Manufacturer, trade name, catalog number, and Supplier of each product and item of equipment actually installed.

2. Changes made by Change Order or Field Order.

3. Other matters not originally specified.

3.04 SHOP DRAWINGS

A. Maintain as record documents those Drawings so directed by the Engineer.

B. Legibly annotate drawings to record changes made after review.

END OF SECTION

NEWMARKET

March 15, 2015

S P E C I A L P R O V I S I O N

AMENDMENT TO SECTION 520 - CONCRETE

This Special Provision modifies and amends Section 608 NHDOT specifications as noted.

Description

Add the following:

1.1.2 This work shall consist of: construction of new concrete cantilever deck as shown on Sheet 13 – Cantilever Deck Detail Sheet.

Basis of Payment

Add the following **Pay Item and Units:**

520.8	Cantilever Deck	U

NEWMARKET

March 15, 2015

S P E C I A L P R O V I S I O N

AMENDMENT TO SECTION 608 – SIDEWALKS

This Special Provision modifies and amends Section 608 NHDOT specifications as noted.

Description

Replace 1.1 with the following:

1.1 This work shall consist of: construction of new concrete, brick, cobblestone crosswalk pavers, and exposed aggregate concrete sidewalks including reconstruction of subbase at the locations shown on the plans or as ordered, and sidewalk types, appearance and patterns as indicated on the plans and details.

Materials

Amend: The following Sections:

2.2 All concrete shall be Class 'A' Portland cement, conforming to Section 520, 4000-PSI fiber reinforced with 5 to 7 percent air entrainment. The maximum slump that will be allowed is 5". This may be tested by the Engineer at any time. All concrete will have polyfiber reinforcing. Any concrete found not meeting this specification will be removed and repoured by the Contractor with no additional expense to the owner. Control joints shall be 5' apart unless otherwise shown on the Drawings and shall be ¼ of the depth of the sidewalk. Expansion joints shall occur at all structures and at intervals no more than 25' on center.

2.2.1 Aggregate for concrete sidewalks shall be standard stone size #67 except that Aggregate for exposed aggregate concrete sidewalks shall be ASTM C 33 uniformly graded, from a single source with coarse aggregate as follows:

Exposed Aggregate: Selected, hard and durable; washed, free of material that reflects with cementitious material and/or causes staining, with gap grated coarse aggregate as follows:

a. Aggregate size: 3/8 to 5/8 inch.

b. Color range to be blue grey. Provide aggregate sample and construct mock-up panel to be provided and prior to construction.

Add: The following Sections:

2.2.3 All exposed surfaces of sidewalks will be sealed as specified under 534.3.4

Amend: The following Sections:

2.3 Reinforcement for Exposed aggregate Concrete shall conform to 544.2.2

Add: The following Sections:

2.6 All bricks shall conform to the requirements of ASTM Standard Specifications for Building Bricks Designation C902 SX for Grade SW. The bricks shall be No. 1, wire cut tape for paving, with a compressive strength of not less than 6,000 pounds per square inch. The bricks shall not be cored or have frogs and shall be of standard size (2.25" x 3.625" x 7.625")

Brick shall be Boston City Hall pavers as produced by Stiles and Hart Company. Brick shall conform to ASTM C902-99a. The average comprehensive strength shall be a minimum of 8000 psi and average water absorption of no more than 6% (24 hour submersion at room temperature). The radius of rupture shall not be less than 1,000 pounds per square inch. The contractor shall submit samples of the brick pavers for approval.

2.7 All cobblestone shall be rounded, smooth, egg-shaped, clean gravel tailings, sourced from a single location as follows:

1. Cobble size: 3"minimum to 6" maximum.
2. Color range to be blue-grey.
   a. Sample to be provided and panel to be constructed for approval prior to construction.

2.8 All concrete crosswalk pavers shall be as follows:

1. Size: 10 ¼" x 10 ¼" x 3 1/8"
2. Shape: Interlocking L-shaped
3. Color: Rustic-Red
4. Pavers shall meet the following criteria:
   a. Conform to ASTM C 936
   b. Average Compressive strength shall be 8000 psi with no unit under 7200 psi.
   c. Average absorption rate shall be 5% and no value greater than 7% shall be allowed when tested according to ASTM C 140 Standards.
   d. Pavers shall resist 50 freeze thaw cycles, as tested in accordance to ASTM C 67 with no breakage greater than 1% loss in dry weight of any individual unit. Testing shall not be conducted more than 12 months prior to delivery of units.
   e. Pigment shall conform to ASTM C 979. Refer to ACI report #212.3R.

f. A product that meets these requirements is the Optiloc Paver manufactured by Unilock Pavers, www.unilock.com.

2.9 All concrete paver bedding and joint sand shall be clean, non-plastic and free from deleterious materials and foreign matter. Sand may be natural or manufactured from crushed rock, often referred to as concrete sand. Sand shall conform to the following tables:

SIEVE SIZE	PERCENTAGE PASSING
3/8"	100
No. 4	95 - 100
No. 8	70 - 100
No. 16	50 - 85
No. 30	25 - 60
No. 50	10 - 30
No. 100	2 – 10

1. It is recommended that specially graded sand be used for joints. The gradations shown below are recommended. Joint sand should never be used for bedding sand.
2. The joint sand shall conform to the grading requirements of ASTM C 144 as shown in Table 2 below:

SIEVE SIZE	NATURAL SAND PERCENTAGE PASSING	MANUFACTURER SAND PERCENTAGE PASSING
No. 4	100	100
No. 8	95 – 100	95 - 100
No. 16	70 -100	70 - 100
No. 30	40 – 75	40 – 75
No. 50	10 – 35	20 – 40
No. 100	2 – 15	10 - 25
No. 200	0	0 - 10

Construction Requirements

Add the following paragraphs:

3.3 Exposed Aggregate Concrete Sidewalk

Construction of Exposed Aggregate Concrete Sidewalk surfaces shall utilize the following:

3.3.1. Curing Materials

a. Absorptive Cover: AASHTO M 182, Class 2, burlap cloth made from jute or kenaf, weighing approximately 9 oz./sq. yd. (305 g/sq.m) dry.

b. Moisture-Retaining Cover: ASTM C 171, polyethylene film or white burlap-polyethylene sheet.
c. Water: Potable
d. Evaporation Retarder: Waterborne, monomolecular film forming, manufactured for application to fresh concrete.
e. Products: Subject to compliance with requirements, provide one of the following:

   Evaporation Retarder:
   i. Spray-Film; ChemMasters.
   ii. Sure Film; Dayton Superior Corporation
   iii. SikaFilm; Sika Corporation

f. Chemical Surface Retarder: Water-soluble, liquid set retarder with color dye, for horizontal concrete surface application, capable of temporarily delaying final hardening of concrete to a depth of 1/8 to 1/4 inch (3 to 6 mm).
g. Products subject to compliance with requirements, provide one of the following:

   Chemical Surface Retarder:
   i. Exposee; ChemMasters.
   ii. Concrete Surface Retarders, Euclid Chemical Co.
   iii. Rugasol-S; Sika Corporation.

3.3.2 Concrete Finishing for Exposed Aggregate Concrete Sidewalks shall be constructed as follow:

3.3.2.1 General: Wetting of concrete surfaces during screening, initial floating, or finishing operations is prohibited.

3.3.2.2 Float Finish: Begin the second floating operation when bleed-water sheen has disappeared and the concrete surface has stiffened sufficiently to permit operations. Float surface with power-driven floats, or by hand floating if area is small or inaccessible to power units. Finish surfaces to true planes. Cut down high spots, and fill low spots. Refloat surface immediately to uniform granular texture.

a. Medium-to-Fine-Texture Broom Finish: Draw a soft bristle broom across float-finished concrete surface perpendicular to fine of traffic to provide a uniform, fine-line texture.

3.3.2.3 Monolithic Exposed Aggregate Finish: Expose coarse aggregate to pavement surfaces as follows:
a. Immediately after floating, spray-apply chemical surface retarder to pavement according to manufacturer's written instructions.

b. Cover with plastic sheeting, sealing laps with tape, and remove when ready to continue finishing operations.
c. Without dislodging aggregate, remove excess mortar by lightly brushing surface with a stiff, nylon bristle broom.
d. Fine-spray surface with water and brush. Repeat water flushing and brushing cycle until cement film is removed from aggregate surfaces to depth required.
e. The process shall result in an exposure that matches existing exposed aggregate surfaces.

3.3.3 Concrete Protection and Curing

3.3.3.1 General: Protect freshly placed concrete from premature drying and excessive cold or hot temperatures. Comply with ACI 306.1 for cold-weather protection and follow recommendations in ACI 305R for hot weather protection during curing.

3.3.3.2 Evaporation Retarder: Apply evaporation retarder to concrete surfaces if hot, dry, or windy conditions cause moisture loss approaching 0.2 lb./sq. ft. x h (1kg/sq. m x h) before and during finishing operations. Apply according to manufacturer's written instructions after placing, screening, and bull floating or darbying concrete, but before float finishing.

3.3.3.3 Begin curing after finishing concrete, but not before free water has disappeared from concrete surface.

3.3.3.4 Curing Methods: Cure concrete by moisture curing, moisture-retaining-cover-curing, curing compound, or a combination of these as follows:
a. Moisture Curing: Keep surfaces continuously moist for not less than seven days with the following materials:
   i. Water.
   ii. Continuous water-fog spray.
   iii. Absorptive cover, water saturated, and kept continuously wet. Cover concrete surfaces and edges with 12 inch (300-mm) lap over adjacent absorptive covers.

3.3.4 Pavement Tolerances

3.3.4.1 Comply with tolerances of NHDOT and as follows:

a. Elevation: 1/4 inch.
b. Thickness: Plus 3/8 inch, minus 1/4 inch.
c. Surface: Gap below 10-foot- long, unleveled straightedge not to exceed 1/4 inch.
d. Lateral Alignment and Spacing of Tie Bars and Dowels: 1 inch.

e. Vertical Alignment of Tie Bars and Dowels: 1/4 inch.
f. Alignment of Tie Bars and Dowels: ¼ inch.
g. Alignment of Dowel-Bar End Relative to Line Perpendicular to Pavement Edge: Length of dowel 1/4 inch per 12 inches.
h. Joint Spacing: 3 inches.
i. Contraction Joint Depth: Plus 1/4 inch, no minus.
j. Joint Width: Plus 1/8 inch, no minus.

3.4 Brick Sidewalks and Accent Strips

3.4.1 The clay brick pavers shall be laid in a 1 inch bed of compacted stone dust placed over landscape filter fabric. Supplying and installing the stone dust bed and fabric shall be considered subsidiary to this item.

3.4.2 The stone dust shall be clean, sharp, washed concrete sand. The material shall not contain more than two percent (2%) silt and shall be free from deleterious soluble salts. The gradation shall meet the requirements of the following range:

SIEVE SIZE	PERCENTAGE PASSING
3/8"	100
No. 4	95 - 100
No. 8	70 - 100
No. 18	50 - 85
No. 30	25 - 60
No. 50	10 - 30
No. 100	5 - 20
No. 200	0 - 10

The stone dust shall be swept between the bricks. Thoroughly water the work to saturate the stone dust by using a sprinkler without washing off the layer of dust. The stone dust shall remain in the surface for a minimum of 24 hours, after which time the surface shall be swept clean. Avoid raking dust out of the joints.

The stone fines setting bed shall be placed and compacted to a finished thickness of one inch (1”). Compaction shall be by mechanical vibrator resulting in a compaction of eighty (80%) of maximum density. Once compacted, the top one-quarter inch (1/4”) shall be loosened with a hand rake.

3.4.3 The Contractor shall install, in two (2) pieces, the landscape filter fabric over the base material or the planter mix for the brick accent area. Each piece shall be cut to allow for the tree trunk. All joints shall overlap by two inches (2"). The landscape filter fabric shall be installed in such a manner that the edges, on all sides shall extend vertically, around the perimeter of the tree cut-out to

one inch (1") of the finish grade. Landscape Filter fabric shall be non-biodegradable, non-woven, one hundred percent (100%) polypropylene fabric. The color shall be black. The fabric shall conform to the following minimum specifications:

Grab Tensile Strength (lbs.) ASTM D 1682	110
Grab Elongation (90) ASTM D 1682	65
Trapezoid Tear Strength (lbs.) ASTM D 2263	50
Mullen Burst Strength (PSI) ASTM D 3786	250
Punctured Strength (lbs.) ASTM D 751	70
Coefficient of Permeability (cm/sec.)	0.10 - 0.30
Equivalent Opening Size US STD. Sieve	70 - 100

3.4.4 The Contractor shall place the brick pavers as shown on the Plans. Pavers shall be tamped firmly into the stone fine bedding, and shall meet the required finish grade. Pavers shall be spaced a minimum of one-eighth inch (1/8") and a maximum of one-quarter inch (1/4") apart. Where the geometry of paving area does not allow receiving full size units or pavers require fitting against the edges, the bricks shall be cut. All pavers shall be saw cut to straight and even surfaces without chipping. Pavers with chips, cracks, and/or irregularities as a result of saw cutting shall not be permitted.

3.4.5 Finish brick pattern shall be as shown on the plans.

3.4.6 The sidewalk shall pitch 1/4 inch per foot toward the street unless directed otherwise.

3.4.7 All existing pavement surfaces on abutters' properties shall be saw cut or as directed by the Engineer. All unsuitable material shall be removed and disposed of in an approved manner off site. The Contractor shall remove existing sidewalk materials in such a manner that maintains the conditions of abutting structures.

3.4.8 In areas where the bricks are not adjacent to granite curbing or concrete sidewalks, the Contractor shall install edging to hold bricks in place. Such edging shall be installed to per the manufacturer's recommendations and is subsidiary to brick sidewalks and accent strips.

3.4.9 Prior to installing stone dust material on brick pavers the steel edging and stakes shall be installed and secured in place. Once the area has been paved and the steel edging installed, the Contractor shall spread a thin layer of stone

fine bedding over the paver surface. The stone fine material shall be hosed and/or broomed into the joints between pavers and pavers and trees. Once all joints have been filled, the Contractor shall sweep clean all pavers and surrounding surfaces.

3.4.10 All material which has accumulated between the tree trunk and the brick pavers shall be removed to the top of the root ball. The Contractor shall install rounded sand in the space between the brick pavers and the tree trunk to meet the finish grade of the pavers.

3.5 Modular Paver Crosswalk. This work will require temporary detours and coordination with the Town to facilitate Construction. It is anticipated that the modular paver crosswalk will be constructed in two parts and scheduling of the work will be submitted for the Town's review and approval.

3.5.1 The Contractor shall verify that road base materials and concrete base have been placed according to specifications and drawings and that aggregate base materials, thickness, compaction, surface tolerances and elevations conform to the specifications.

3.5.2 Road base materials should be spread and compacted in uniform layers not exceeding 8 inch thickness as shown on the plans. Base surface tolerance should be plus or minus 3/8 in. (10mm) over a 10 foot (3 m) straight edge. The Engineer will inspect base preparation, surface tolerances and elevations for conformance to specifications.

3.5.3 Verify the proper installation of the concrete curbing, in terms of location, elevation, and adherence to the specifications.

3.5.4 Verify that the base is dry, uniform, even and ready to support sand stone and unilock pavers.

3.5.5 Granite curbing with concrete edge restraint shall be provided around the perimeter of the modular paver crosswalk as shown on the Drawings. The face of the edge restraint, where it abuts pavers, shall be vertical down to the subbase.

3.5.6 Spread the bedding sand evenly over the concrete base course and screed to a nominal 1 inch (25mm) thickness, not exceeding 1 1/2 inch (40 mm) thickness. The screeded sand should not be disturbed. Sufficient sand shall be placed in order to stay ahead of the laid pavers. Do not use the bedding sand to fill depressions in the base surface.

3.5.7 The spread sand shall be carefully maintained in a loose condition and protected against incidental compaction, both prior to and following

screeding. Any incidentally compacted sand or screeded sand left overnight shall be loosened before further paving units are placed. Sand shall be lightly screeded in a loose condition to the predetermined depth, only slightly ahead of the paving units. Under no circumstances shall the sand be screeded in advance of the laying face to an extent to which paving will not be complete on that day.

3.5.8 Screed sand shall be fully protected against incidental compaction, including compaction by rain. Any screeded sand which is incidentally compacted prior to the laying of the paving unit shall be removed and brought back to profile in a loose condition. Neither pedestrian nor vehicular traffic shall be permitted on the screeded sand.

3.5.9 The Contractor shall screed the bedding sand using either an approved mechanical spreader (e.g.: an asphalt paver) or by the use of screed rails and boards. Initiation of paver placement shall be deemed to represent acceptance of the pavers. Pavers shall be free of foreign material before installation. Pavers shall be inspected for color distribution and all chipped, damaged or discolored pavers shall be replaced.

3.5.10 Color Blending: Paving units shall be installed from a minimum of 3 bundles simultaneously drawing the paver vertically rather than horizontally. (Color variation occurs with all concrete products. This phenomenon is influenced by a variety of factors, e.g. moisture content, curing conditions, different aggregates and, most commonly, from different production runs.) By installing from a minimum of three bundles simultaneously, variation in color is dispersed and blended throughout the project.

3.5.11 The pavers shall be laid within the limits shown on the Drawings unless otherwise directed. String lines or chalk lines on bedding sand should be used to hold all pattern lines true.

3.5.12 Joints between the pavers on average shall be between 1/16 inch and 1/8 inch wide. Joint spacing must be consistent. This spacing must also be provided for the first row abutting the edge restraint.

3.5.13 Installing pavers too tightly may lead to chipping at the edges. Gaps at the edges of the paved area shall be filled with cut pavers. Units cut no smaller than one-third of a whole paver are required along edges subject to vehicular traffic. Pavers to be placed along the edge shall be cut with a double blade paver splitter or masonry saw.

3.5.14 The use of infill concrete or discontinuities in patterns will not be permitted except adjacent to manhole covers or other structures.

3.5.15 Upon completion of cutting, the area must be swept clean of all debris to facilitate inspection and to ensure pavers are not damaged during compaction. (Debris or sand particles left on pavers which are being compacted can cause point loading which may chip, scrape or break the paver.)

3.5.16 After sweeping and prior to compaction, the area must be inspected to ensure satisfactory color blending. Pavers can be moved easily at this time to achieve good color distribution.

3.5.17 Low amplitude, high frequency plate compactor shall be used to compact the pavers into the sand. The compactor shall transmit an effectoive force not less than 75 kN per square meter (1600 Lb/ft^2) of plate area. The frequency of vibration shall be within the rnage of 75 to 100 Hz.

PAVER THICKNESS AND REQUIRED MINIMUM COMPACTION FORCE

Paver Thickness	**Compaction Force**
2 ¾ inch (70 mm) & 3 1/8 inch (80 mm)	5000 lbs. [22kN]

3.5.18 Use of a urethane plate compactor pad is recommended to minimize any scuffing of the paving stone surface.

3.5.19 The pavers shall be compacted to achieve consolidation of the sand bedding and brought to a level and profile by not less than three passes. Initial compaction should proceed as closely as possible following the installation of the paving units and prior to the acceptance of any traffic or application of sweeping sand.

3.5.20 Any units that are structurally damaged during compaction shall be immediately removed and replaced.

3.5.21 Dry joint sand shall be swept into the joints until the joints are full. This will require at least two or three passes with the compactor. Do not compact within 3 ft. (1 m) of the unrestrained edges of the paving units.

3.5.22 All work within 3 feet (1 m) of the laying face must be left fully compacted with sand-filled joints at the completion of each day.

3.5.23 Excess joint sand shall be swept off when the job is complete.

3.5.24 Check elevations for conformance to the drawings after removal of excess joint sand.

3.5.24.1 All surface and pavement structures shall be true to the lines and levels, grades, thickness and cross sections shown on the drawings. All pavements shall be finished to lines and levels to ensure positive drainage at all drainage outlets and channels. In no case shall the cross-fall of any portion of pavement be less than 2 percent. The final surface elevations shall not deviate more than 3/8 inch (10 mm) under a 10 foot (3 m) long straight edge.

3.5.24.2 The surface elevation of pavers shall be 1/8 to ¼ inch (3 to 6 mm) above adjacent drainage inlets, concrete collars or channels.

Basis of Payment

Add the following paragraph:

5.1.2 Materials, labor, cutting and equipment required to retrofit existing steps and walkways as shown on the plans will be subsidiary.

Add the following **Pay Item and Units:**

608.441	Concrete Sidewalks (fiber reinforced, 4-inch depth)	SY
608.442	Exposed Aggregate Concrete Sidewalks (wire rein., 4-inch depth)	SY
608.5	Brick Sidewalks & Accent Strips	SY
608.6	Modular Paver Crosswalk	SY

NEWMARKET

March 15, 2015

S P E C I A L P R O V I S I O N

AMENDMENT TO SECTION 616 – TRAFFIC SIGNALS

Item 616.201 – Rectangular Rapid Flashing Beacon

This special provision provides for the construction of a new rectangular Rapid Flashing Beacon System (RRFB) on NH Rte 108 at the crosswalks located at Sta. 28+55 (RT), 31+00 (LT and RT), 40+65 (LT and RT), and 43+45 (LT and RT) in the Town of Newmarket.

Add to Description:

1.3 All provisions of Section 616, except as modified or changed below, shall apply.

a. The RRFB must be inspected and approved by the Bureau of Traffic prior to placing in operation. The Contractor shall contact Peter Crouch at the Bureau of Traffic at (603) 271-2291 one week prior to installation. If the Contractor does not speak directly with Peter Crouch they must leave a detailed message with the Administrative Assistant and expect a call back. Leaving a message does not constitute an approval.

Add to 2.1:

2.1.3 List of Major Materials for RRFB:

2.1.3.1 Housing, Post and Signs.

a. RRFB housings shall be made from powder coated aluminum (black).

b. The outside edges of the RRFB indications, including any housing, shall not project beyond the outside edges of the W11-2 sign.

c. The RRFB shall be located between the bottom of the crossing warning sign (W11-2) and the top of the supplemental downward diagonal arrow plaque (W16-7p), rather than 12” above or below the sign assembly.

d. Each RRFB assembly shall be mounted on a tapered tubular aluminum pole (2 total) with a aluminum square pedestal breakaway base assembly. The poles, breakaway assemblies, and foundations shall conform to Section 616 of the Standard Specifications.

e. The pedestrian crossing signs (W11-2) and arrow plaques (W16-7P) shall be Type CC signs, as defined in Section 615 of the Standard Specifications.

f. R1-6 Sign shall be installed in roadway on the roadway centerline.

2.1.3.2 LED.

a. There shall be 8 7” x 3” amber LED arrays.

b. The 2 RRFB indications shall be aligned horizontally, with the longer dimension horizontal and with a minimum space between the two indications of approximately seven inches (7”), measured from inside edge of one indication to inside edge of the other indication.

c. The light intensity of the yellow indications shall meet the minimum specifications of Society of Automotive Engineers (SAE) standard J595 (Directional Flashing Optical Warning Devices for Authorized Emergency, Maintenance, and Service Vehicles) dated January 2005.

2.1.2.3 Operation and Flash Rate.

a. RRFBs shall use a much faster flash rate. Each of the two yellow indications of an RRFB shall have 70 to 80 periods of flashing per minute and shall have alternating but approximately equal periods of rapid pulsing light emissions and dark operation. During each of its 70 to 80 flashing periods per minute, one of the yellow indications shall emit two rapid pulses of light and the other yellow indication shall emit three rapid pulses of light.

b. The flash rate of each individual yellow indication, as applied over the full on-off sequence of a flashing period of the indication, shall not be between 5 and 30 flashes per second, to avoid frequencies that might cause seizures.

c. When activated, the two yellow indications in each RRFB shall flash in a rapidly alternating "wig-wag" flashing sequence (left light on, then right light on).

d. The RRFB shall be normally dark, shall initiate operation only upon pedestrian actuation, and shall cease operation at a predetermined time after the pedestrian actuation.

e. All RRFBs associated with a given crosswalk shall, when activated, simultaneously commence operation of their alternating rapid flashing indications and shall cease operation simultaneously.

2.1.2.4 Pushbutton & Walk Duration.

a. Pedestrian pushbuttons shall be used to actuate the RRFBs, and a pedestrian instruction sign with the legend R10-25 PUSH BUTTON TO TURN ON WARNING LIGHTS.

b. The duration of a predetermined period of operation of the RRFBs following each actuation shall be based on the MUTCD procedures for timing of pedestrian clearance times for pedestrian signals (3.5 ft. /sec Maximum) plus an additional 4 seconds.

c. The pedestrian Piezo style push buttons, shall conform to the applicable provisions of the ADA.

2.1.2.4 Solar Power and Radio Communications.

a. The solar power system (1 required per assembly, 2 total) shall be housed in a NEMA 4 rated fiberglass cabinet with lockable straps.

b. The solar panel shall be approximately 25 ¼" H x 25 ¾" W x 1 ½" D and have a articulating mount that pivots.

c. The solar power system control circuitry shall be in a NEMA IP-67 rated enclosure dustproof and waterproof in up to 3' for 30 minutes.

d. The solar panel shall produce at least 55 watts, conform to IP-67, and be adjustable to an angle of between 40 degrees and 60 degrees from the ground.

e. The solar battery shall be a 12 V, 40 AH sealed gel unit that does not require periodic watering. The battery shall be capable of operation without sun for 30 days and have a life span of 2 years.

f. Solar & Battery installation shall be installed by manufacturer recommendations for optimum performance.

g. Radio communication shall be used to connect the RRFB's on either side of the street.

h. The radio shall operate at 900 MHz, and shall utilize frequency hopping spread spectrum network with an operating range of 3.6 vdc to 15 vdc.

Add to Construction Requirements:

3.1 All RRFB and electrical installations shall comply with the requirements specified herein, local and utility codes, MUTCD, and the National Electrical Code (NEC).

Add to Method of Measurement:

4.2 RRFB shall be measured as a unit and include all appurtenances described above for ~~two~~ **each** pedestrian crossing signs.

Add to Basis of Payment:

5.4 The accepted quantity of RRFB will be paid for at the Contract lump sum price complete in place.

Add to Pay Items and Units:

616.201	Rectangular Rapid Flashing Beacon	Each

S P E C I A L P R O V I S I O N

AMENDMENT TO SECTION 665 – LIGHT FIXTURES

Item 665.2 – Pedestrian LED Light Fixtures

Description

1.1 This work shall consist of furnishing and installing Pedestrian Light-Emitting Diode (LED) Fixtures as shown on the plans.

Materials

2.1 The pedestrian pendant luminaire shall be King Luminaire Catalog Number K211-P4SH-III-60(SSL)-7030-120:277-BK, or approved equal. The LED luminaire shall be suitable for attachment to the bracket arm by means of a plumbizer device Luminaire shall be of cast aluminum ANSI 356 per ASTM B26-95 and stamped sheet aluminum.

2.2.1 Housing: The luminaire housing shall consist of a cast aluminum upper and lower enclosure, connected by a venting spacer for dynamic air flow. The upper housing consists of two heavy wall aluminum casting designed for mounting the luminaire to the arm hanger component and to facilitate tool-less access to the driver component. The lower housing consists of a heavy wall cast aluminum enclosures designed to support the LED light engine.

2.2.2 Electrical System: The solid state driver for the LED light source shall be a Class 2 type, operating at a maximum current of 600 mA. The driver shall have a minimum life expectancy of 100,000 hours at or below 25 degrees C, with an operating temperature range from a minimum of -30 degrees C to a maximum of 70 degrees C. The driver casing shall have a minimum ingress protection of IP67.

2.2.3 Optical System: The luminaire shall use high output, high brightness LED's. The LED's shall be mounted on printed aluminum circuit boards with a thermal interface material to maximize heat transfer to the heat sink surface. The LED's shall work with and micro-lens system, capable of producing an IESNA Type III roadway distribution. The LED life rating data shall be determined in accordance with Illuminating Engineering Society of North America (IESNA) Lumen maintenance (LM)-80-08. The LED light engine shall produce a 4500K (+/- 300 degrees) color temperature with a minimum CRI of 70. The tested luminaire shall deliver 5,219 lumens (nominal) with a minimum efficacy of 84 lumens/watt.

2.2.4 Plumbizer: Each luminaire shall include a hanging device designed for positive attachment of the luminaire to the bracket arm in high vibration conditions. The device shall include integral leveling capabilities and a positive locking method to keep the luminaire in the intended orientation. Hanging devices that utilize pipe thread nipples to support the luminaire will not be considered equal to the specification.

2.2.5 Warranty: The luminaire manufacturer shall provide a 10-year product warranty from date of shipment against defects in materials and workmanship while operating in proper use.

2.2.6 Finish: The luminaire shall be finished with a TGIC polyester powder coating with a textured black finish.

2.2 Arm Assembly: The arm assembly shall be King Luminaire #KA31-S-2.5' (Mod.). The arm shall be aluminum arm must be Schedule 40 aluminum pipe with a minimum diameter of 2" IPS (2 3/8" OD). The arm must have 32 3/4" outreach to achieve the upsweep intend of the design. The decorative scroll shall comprise of aluminum flat bar stock ¼" minimum thickness. The scroll shall have a radium that meets the design intend. The arm will be mounted using a side mount u channel bracket.

2.2.1 The manufacturer must be ISO 9001:2000 certified as a minimum and be in business for at least 10 years manufacturing similar arm styles.

2.2.2 Warranty: The luminaire manufacturer shall provide a 3-year product warranty from date of shipment against defects in materials and workmanship while operating in proper use.

2.2.3 Finish: The luminaire arm shall be finished with a TGIC polyester powder coating with textured black finish.

Construction Requirements

3.1. All Pedestrian LED Light Fixtures and electrical installations shall comply with the requirements specified herein, local and utility codes, and the National Electrical Code (NEC).

Method of Measurement

4.1. Pedestrian LED Light Fixtures shall be measured as a unit and include all appurtenances described above for each pedestrian fixture.

Basis of Payment

5.1. The accepted quantity of Pedestrian LED Light Fixture will be paid for at the Item Contract Price per unit/each complete in place.

Pay items and units:

665.2	Pedestrian LED Light Fixture	Each

S P E C I A L P R O V I S I O N

AMENDMENT TO SECTION 665 – LIGHT FIXTURES

Item 665.3 – LED Luminaire Conversion, Street Light Fixture

Item 665.4 – LED Luminaire Conversion, Pedestrian Light Fixture

Description

1.1 This work shall consist of furnishing and installing Light-Emitting Diode (LED) Luminaire Conversion assemblies to existing high pressure sodium Street and Pedestrian Light Fixtures as shown on the plans. Existing fixture information is identified in Section 1.2.1 and 1.2.2 of this Special Provision.

1.1.1 Existing Street Light Fixture :

Manufacture:	King Luminaire
Catalog No.:	K204-EAD-III-100(MOG)-HPS-240-KPL20-6
Optical System:	External Acrylic Deep Dish
IES Classification:	Type III
Wattage:	100W
Socket Type:	Mogul
Light Source:	High Pressure Sodium
Line Voltage:	240V
Options:	KPL-20-#6 Leveling Device C/W #6 Final K206 Marina Spinning

1.1.2 Existing Pedestrian Light Fixture:

Manufacture:	King Luminaire
Catalog No.:	K211-EAS-III-70(MOG)-HPS-240-KPL20-6
Optical System:	External Acrylic Shallow Dish
IES Classification:	Type III
Wattage:	70W
Socket Type:	Mogul
Light Source:	High Pressure Sodium
Line Voltage:	240V
Options:	KPL-20-#6 Leveling

Materials

2.1 Street Light Fixture :

Manufacture:	King Luminaire
Catalog No.:	K204-P4SH-III-60(SSL)-7030-120:277
Optical System:	Flat Array, Shallow Lens
IES Classification:	Type III
Wattage:	60W
Socket Type:	7030

Light Source:	Solid State Lighting
Line Voltage:	120:277V
Paint:	Textured Black

2.2 Pedestrian Light Fixture:

Manufacture:	King Luminaire
Catalog No.:	K211-P4SH-III-60(SSL)-7030-120:277
Optical System:	Flat Array, Shallow Lens
IES Classification:	Type III
Wattage:	60W
Socket Type:	7030
Light Source:	Solid State Lighting
Line Voltage:	120:277V
Paint:	Textured Black

2.3 The LED luminaire shall be suitable for attachment to the bracket arm by means of a plumbizer device. Luminaire shall be of cast aluminum ANSI 356 per ASTM B26-95 and stamped sheet aluminum.

2.3.1 Housing: The luminaire housing shall consist of a cast aluminum upper and lower enclosure, connected by a venting spacer for dynamic air flow. The upper housing consists of two heavy wall aluminum casting designed for mounting the luminaire to the arm hanger component and to facilitate tool-less access to the driver component. The lower housing consists of a heavy wall cast aluminum enclosures designed to support the LED light engine.

2.3.2 Electrical System: The solid state driver for the LED light source shall be a Class 2 type, operating at a maximum current of 600 mA. The driver shall have a minimum life expectancy of 100,000 hours at or below 25 degrees C, with an operating temperature range from a minimum of -30 degrees C to a maximum of 70 degrees C. The driver casing shall have a minimum ingress protection of IP67.

2.3.3 Optical System: The luminaire shall use high output, high brightness LED's. The LED's shall be mounted on printed aluminum circuit boards with a thermal interface material to maximize heat transfer to the heat sink surface. The LED's shall work with and micro-lens system, capable of producing an IESNA Type III roadway distribution. The LED life rating data shall be determined in accordance with Illuminating Engineering Society of North America (IESNA) Lumen maintenance (LM)-80-08. The LED light engine shall produce a 4500K (+/- 300 degrees) color temperature with a minimum CRI of 70. The tested luminaire shall deliver 5,219 lumens (nominal) with a minimum efficacy of 84 lumens/watt.

2.3.4 Warranty: The luminaire manufacturer shall provide a 10-year product warranty from date of shipment against defects in materials and workmanship while operating in proper use.

Construction Requirements

1.1.1 All LED luminaire conversion installations shall comply with the requirements specified herein, local and utility codes, and the National Electrical Code (NEC).

Method of Measurement

4.1. LED Luminaire Conversion for existing Street and Pedestrian light fixtures shall be measured as a unit and include all appurtenances described above for each fixture.

Basis of Payment

5.1. The accepted quantity of LED Luminaire Conversion for existing Street and Pedestrian light fixtures will be paid for at the Item Contract Price per unit/each complete in place.

Pay items and units:

665.3	LED Luminaire Conversion – Street Light Fixture	Each
665.4	LED Luminaire Conversion – Pedestrian Light Fixture	Each

FEDERAL FUNDED PROJECT REQUIREMENTS

06/24/08

SA

Supercedes: 9/11/06, 12/5/90

WAGE RATES

FEDERAL AID PROJECTS

This proposal contains minimum wage determinations as specified by the U.S. Secretary of Labor. Copies of the attached wage determination(s) shall be posted on the bulletin board at the work site and furnished to employees upon request. Furthermore, the wage determination(s) shall be incorporated into all subcontract agreements.

If the Contractor, any subcontractor or lower-tier contractor intends to employ a classification of labor not listed in the attached determination(s), it shall submit a Request for Additional Work Classification(s) to the New Hampshire Department of Transportation, Labor Compliance Office at (603) 271-2467. The Contractor is responsible for ensuring that a Request is submitted for any additional classification of work to be employed by itself, any subcontractor or lower-tier contractor 3-4 weeks before the classification is utilized.

This contract is subject to the Work Hours Act of 1962, P.L. 87-581 and implementing regulations.

NOTICE TO ALL BIDDERS

In accordance with the section "NOTICE OF REQUIREMENT FOR AFFIRMATIVE ACTION TO ENSURE EQUAL EMPLOYMENT OPPORTUNITY (EXECUTIVE ORDER 11246)", the New Hampshire Department of Transportation has the authority and responsibility to notify the Office of Federal Contract Compliance Programs of the United States Department of Labor if they become aware of any possible violations of Executive Order 11246 and 41 Code of Federal Regulation Chapter 60.

The Office of Federal Contract Compliance Programs is the sole authority for determining compliance with Executive Order 11246 and 41 Code of Federal Regulation Chapter 60 and the Contractor should contact them regarding related compliance issues.

General Decision Number: NH150033 01/02/2015 NH33

Superseded General Decision Number: NH20140033

State: New Hampshire

Construction Type: Highway

County: Rockingham County in New Hampshire.

HIGHWAY CONSTRUCTION PROJECTS (excluding tunnels, building structures in rest area projects & railroad construction; bascule, suspension & spandrel arch bridges designed for commercial navigation, bridges involving marine construction; and other major bridges).

Note: Executive Order (EO) 13658 establishes an hourly minimum wage of $10.10 for 2015 that applies to all contracts subject to the Davis-Bacon Act for which the solicitation is issued on or after January 1, 2015. If this contract is covered by the EO, the contractor must pay all workers in any classification listed on this wage determination at least $10.10 (or the applicable wage rate listed on this wage determination, if it is higher) for all hours spent performing on the contract. The EO minimum wage rate will be adjusted annually. Additional information on contractor requirements and worker protections under the EO is available at www.dol.gov/whd/govcontracts.

Modification Number	Publication Date
0	01/02/2015

* SUNH2011-029 08/15/2011

	Rates	Fringes
CARPENTER (Excluding Form Work)	$ 23.13	2.51
CARPENTER (Form Work Only)	$ 20.57	1.06
ELECTRICIAN	$ 23.22	2.78
INSTALLER - GUARDRAIL	$ 22.29	11.84
IRONWORKER, REINFORCING	$ 18.00	0.00
IRONWORKER, STRUCTURAL	$ 34.45	17.20
LABORER: BLASTER, ROCK	$ 28.38	9.46
LABORER: Common or General	$ 16.99	2.60
LABORER: Flagger	$ 10.42	1.37
LABORER: Highway/Parking Lot Striping	$ 16.77	0.00
LABORER: Landscape	$ 14.65	0.00

LABORER: Pipelayer	$ 18.29	4.33
OPERATOR: Auger	$ 26.07	0.00
OPERATOR: Backhoe	$ 27.72	4.17
OPERATOR: Bobcat/Skid Steer/Skid Loader	$ 19.25	0.00
OPERATOR: Bucket	$ 30.00	0.00
OPERATOR: Bulldozer	$ 24.59	6.11
OPERATOR: Crane	$ 23.95	3.29
OPERATOR: Drill Rig Caissons	$ 36.86	19.78
OPERATOR: Excavator	$ 24.72	5.58
OPERATOR: Grader/Blade	$ 25.16	6.97
OPERATOR: Loader	$ 24.10	5.72
OPERATOR: Mechanic	$ 16.92	3.44
OPERATOR: Oiler	$ 29.54	16.15
OPERATOR: Paver	$ 23.43	0.00
OPERATOR: Roller	$ 22.27	6.57
OPERATOR: Post Driver/Pounder	$ 27.24	7.90
TRUCK DRIVER, Includes all axles including Dump Trucks	$ 17.51	3.03
TRUCK DRIVER: Low Bed Truck	$ 21.43	6.30

WELDERS - Receive rate prescribed for craft performing operation to which welding is incidental.

==========

Unlisted classifications needed for work not included within the scope of the classifications listed may be added after award only as provided in the labor standards contract clauses (29CFR 5.5 (a) (1) (ii)).

The body of each wage determination lists the classification and wage rates that have been found to be prevailing for the cited type(s) of construction in the area covered by the wage determination. The classifications are listed in alphabetical order of "identifiers" that indicate whether the particular

rate is a union rate (current union negotiated rate for local), a survey rate (weighted average rate) or a union average rate (weighted union average rate).

Union Rate Identifiers

A four letter classification abbreviation identifier enclosed in dotted lines beginning with characters other than "SU" or "UAVG" denotes that the union classification and rate were prevailing for that classification in the survey. Example: PLUM0198-005 07/01/2014. PLUM is an abbreviation identifier of the union which prevailed in the survey for this classification, which in this example would be Plumbers. 0198 indicates the local union number or district council number where applicable, i.e., Plumbers Local 0198. The next number, 005 in the example, is an internal number used in processing the wage determination. 07/01/2014 is the effective date of the most current negotiated rate, which in this example is July 1, 2014.

Union prevailing wage rates are updated to reflect all rate changes in the collective bargaining agreement (CBA) governing this classification and rate.

Survey Rate Identifiers

Classifications listed under the "SU" identifier indicate that no one rate prevailed for this classification in the survey and the published rate is derived by computing a weighted average rate based on all the rates reported in the survey for that classification. As this weighted average rate includes all rates reported in the survey, it may include both union and non-union rates. Example: SULA2012-007 5/13/2014. SU indicates the rates are survey rates based on a weighted average calculation of rates and are not majority rates. LA indicates the State of Louisiana. 2012 is the year of survey on which these classifications and rates are based. The next number, 007 in the example, is an internal number used in producing the wage determination. 5/13/2014 indicates the survey completion date for the classifications and rates under that identifier.

Survey wage rates are not updated and remain in effect until a new survey is conducted.

Union Average Rate Identifiers

Classification(s) listed under the UAVG identifier indicate that no single majority rate prevailed for those classifications; however, 100% of the data reported for the classifications was union data. EXAMPLE: UAVG-OH-0010 08/29/2014. UAVG indicates that the rate is a weighted union average rate. OH indicates the state. The next number, 0010 in the example, is an internal number used in producing the wage determination. 08/29/2014 indicates the survey completion date for the classifications and rates under that identifier.

A UAVG rate will be updated once a year, usually in January of each year, to reflect a weighted average of the current negotiated/CBA rate of the union locals from which the rate is based.

WAGE DETERMINATION APPEALS PROCESS

1.) Has there been an initial decision in the matter? This can be:

* an existing published wage determination
* a survey underlying a wage determination
* a Wage and Hour Division letter setting forth a position on a wage determination matter
* a conformance (additional classification and rate) ruling

On survey related matters, initial contact, including requests for summaries of surveys, should be with the Wage and Hour Regional Office for the area in which the survey was conducted because those Regional Offices have responsibility for the Davis-Bacon survey program. If the response from this initial contact is not satisfactory, then the process described in 2.) and 3.) should be followed.

With regard to any other matter not yet ripe for the formal process described here, initial contact should be with the Branch of Construction Wage Determinations. Write to:

Branch of Construction Wage Determinations
Wage and Hour Division
U.S. Department of Labor
200 Constitution Avenue, N.W.
Washington, DC 20210

2.) If the answer to the question in 1.) is yes, then an interested party (those affected by the action) can request review and reconsideration from the Wage and Hour Administrator (See 29 CFR Part 1.8 and 29 CFR Part 7). Write to:

Wage and Hour Administrator
U.S. Department of Labor
200 Constitution Avenue, N.W.
Washington, DC 20210

The request should be accompanied by a full statement of the interested party's position and by any information (wage payment data, project description, area practice material, etc.) that the requestor considers relevant to the issue.

3.) If the decision of the Administrator is not favorable, an interested party may appeal directly to the Administrative Review Board (formerly the Wage Appeals Board). Write to:

Administrative Review Board
U.S. Department of Labor
200 Constitution Avenue, N.W.
Washington, DC 20210

4.) All decisions by the Administrative Review Board are final.

==========

END OF GENERAL DECISION

Source 41 CFR 60-4 Affirmative Action Requirements

Source: 41 CFR 60-4.2 Solicitations

NOTICE OF REQUIREMENT FOR AFFIRMATIVE ACTION TO ENSURE EQUAL EMPLOYMENT OPPORTUNITY (EXECUTIVE ORDER 11246)

The Offeror's or Bidder's attention is called to the "Equal Opportunity Clause" and the "Standard Federal Equal Employment Specifications" set forth herein.

The goals and timetables for minority and female participation, expressed in percentage terms for the Contractor's aggregate workforce in each trade on all construction work in the covered area, are as follows:

	Goals for minority participation for each trade	Goals for female participation in each trade
STANDARD METROPOLITAN STATISTICAL AREAS (SMSA)		
SALEM-PLAISTOW:	4.0	6.9
MANCHESTER-NASHUA	0.7	6.9
NON-SMSA COUNTIES		
COOS, GRAFTON, SULLIVAN:	0.8	6.9
BELKNAP, MERRIMACK, CARROLL, STRAFFORD:	3.6	6.9
CHESHIRE:	5.9	6.9
ROCKINGHAM:	4.0	6.9
HILLSBOROUGH:	0.7	6.9

These goals are applicable to all the Contractor's construction work (whether or not it is Federal or federally assisted) performed in the covered area. If the contractor performs construction work in a geographical area located outside of the covered area, it shall apply the goals established for such geographical area where the work is actually performed. With regard to this second area, the contractor also is subject to the goals for both its federally involved and nonfederally involved construction.

The Contractor's compliance with the Executive Order and the regulations in 41 CFR Part 60-4 shall be based on its implementation of the Equal Opportunity Clause, specific affirmative action obligations required by the specifications set forth in 41 CFR 60-4.3(a), and its efforts to meet the goals. The hours of minority and female employment and training must be substantially uniform throughout the length of the contract, and in each trade, and the contractor shall make a good faith effort to employ minorities and women evenly on each of its projects. The transfer of minority or female employees or trainees from Contractor to Contractor or from project to project for the sole purpose of meeting the Contractor's goals shall be a violation of the contract, the Executive Order and the regulations in 41 CFR Part 60-4. Compliance with the goals will be measured against the total work hours performed.

The Contractor shall provide written notification to the Director of the Office of Federal Contract Compliance Programs within 10 working days of award of any construction subcontract in excess of $10,000 at any tier for construction work under the contract resulting from this solicitation addressed as follows:

Director
Federal Contract Compliance Program
US Department of Labor
JFK Building, Room 1612-C
Boston, MA 02203

The notification shall list the name, address and telephone number of the subcontractor; employer identification number of the subcontractor; estimated dollar amount of the subcontract; estimated starting and completion dates of the subcontract; and the geographical area in which the subcontract is to be performed **as noted within the Contract Special Provisions** for Affirmative Action to ensure Equal Employment Opportunity..

Source 41 CFR 60-4 Affirmative Action Requirements

Source 41 CFR 60-4.3 Equal Opportunity Clauses

Standard Federal Equal Employment Opportunity Construction Contract Specifications (Executive Order 11246)

[1]. As used in these specifications:

a. "Covered area" means the geographical area described in the solicitation from which this contract resulted;

b. "Director" means Director, Office of Federal Contract Compliance Programs, United States Department of Labor, or any person to whom the Director delegates authority;

c. "Employer identification number" means the Federal Social Security number used on the Employer's Quarterly Federal Tax Return, U.S. Treasury Department Form 941.

d. "Minority" includes:

(i) Black (all persons having origins in any of the Black African racial groups not of Hispanic origin);

(ii) Hispanic (all persons of Mexican, Puerto Rican, Cuban, Central or South American or other Spanish Culture or origin, regardless of race);

(iii) Asian and Pacific Islander (all persons having origins in any of the original peoples of the Far East, Southeast Asia, the Indian Subcontinent, or the Pacific Islands); and

(iv) American Indian or Alaskan Native (all persons having origins in any of the original peoples of North America and maintaining identifiable tribal affiliations through membership and participation or community identification).

[2]. Whenever the Contractor, or any Subcontractor at any tier, subcontracts a portion of the work involving any construction trade, it shall physically include in each subcontract in excess of $10,000 the provisions of these specifications and the Notice which contains the applicable goals for minority and female participation and which is set forth in the solicitations from which this contract resulted.

[3]. If the Contractor is participating (pursuant to 41 CFR 60-4.5) in a Hometown Plan approved by the U.S. Department of Labor in the covered area either individually or through an association, its affirmative action obligations on all work in the Plan area (including goals and timetables) shall be in accordance with that Plan for those trades which have unions participating in the Plan. Contractors must be able to demonstrate their participation in and compliance with the provisions of any such Hometown Plan. Each Contractor or Subcontractor participating in an approved Plan is individually required to comply with its obligations under the EEO clause, and to make a good faith effort to achieve each goal under the Plan in each trade in which it has employees. The overall good faith performance by other Contractors or Subcontractors toward a goal in an approved Plan does not excuse any covered Contractor's or Subcontractor's failure to take good faith efforts to achieve the Plan goals and timetables.

[4]. The Contractor shall implement the specific affirmative action standards provided in paragraphs 7 a through p of these specifications. The goals set forth in the solicitation from which this contract resulted are expressed as percentages of the total hours of employment and training of minority and female utilization the Contractor should reasonably be able to achieve in each construction trade in which it has employees in the covered area. Covered Construction contractors performing construction work in geographical areas where they do not have a Federal or federally assisted construction contract shall apply the minority and female goals established for the geographical area where the work is being performed. Goals are published periodically in the Federal Register in notice form, and such notices may be obtained from any Office of Federal Contract Compliance Programs office or from Federal procurement contracting officers. The Contractor is expected to make substantially uniform progress in meeting its goals in each craft during the period specified.

[5] Neither the provisions of any collective bargaining agreement, nor the failure by a union with whom the Contractor has a collective bargaining agreement, to refer either minorities or women shall excuse the Contractor's obligations under these specifications, Executive Order 11246, or the regulations promulgated pursuant thereto.

[6]. In order for the nonworking training hours of apprentices and trainees to be counted in meeting the goals, such apprentices and trainees must be employed by the Contractor during the training period, and the Contractor must have made a commitment to employ the apprentices and trainees at the completion of their training, subject to the availability of employment opportunities. Trainees must be trained pursuant to training programs approved by the U.S. Department of Labor.

[7]. The Contractor shall take specific affirmative actions to ensure equal employment opportunity. The evaluation of the Contractor's compliance with these specifications shall be based upon its effort to achieve maximum results from its actions. The Contractor shall document these efforts fully, and shall implement affirmative action steps at least as extensive as the following:

a. Ensure and maintain a working environment free of harassment, intimidation, and coercion at all sites, and in all facilities at which the Contractor's employees are assigned to work. The Contractor, where possible, will assign two or more women to each construction project. The Contractor shall specifically ensure that all foremen, superintendents, and other on-site supervisory personnel are aware of and carry out the Contractor's obligation to maintain such a working environment, with specific attention to minority or female individuals working at such sites or in such facilities.

b. Establish and maintain a current list of minority and female recruitment sources, provide written notification to minority and female recruitment sources and to community organizations when the Contractor or its unions have

employment opportunities available, and maintain a record of the organizations' responses.

c. Maintain a current file of the names, addresses and telephone numbers of each minority and female off-the-street applicant and minority or female referral from a union, a recruitment source or community organization and of what action was taken with respect to each such individual. If such individual was sent to the union hiring hall for referral and was not referred back to the Contractor by the union or, if referred, not employed by the Contractor, this shall be documented in the file with the reason therefore, along with whatever additional actions the Contractor may have taken.

d. Provide immediate written notification to the Director when the union or unions with which the Contractor has a collective bargaining agreement has not referred to the Contractor a minority person or woman sent by the Contractor, or when the Contractor has other information that the union referral process has impeded the Contractor's efforts to meet its obligations.

e. Develop on-the-job training opportunities and/or participate in training programs for the area which expressly include minorities and women, including upgrading programs and apprenticeship and trainee programs relevant to the Contractor's employment needs, especially those programs funded or approved by the Department of Labor. The Contractor shall provide notice of these programs to the sources compiled under 7b above.

f. Disseminate the Contractor's EEO policy by providing notice of the policy to unions and training programs and requesting their cooperation in assisting the Contractor in meeting its EEO obligations; by including it in any policy manual and collective bargaining agreement; by publicizing it in the company newspaper, annual report, etc.; by specific review of the policy with all management personnel and with all minority and female employees at least once a year; and by posting the company EEO policy on bulletin boards accessible to all employees at each location where construction work is performed.

g. Review, at least annually, the company's EEO policy and affirmative action obligations under these specifications with all employees having any responsi-bility for hiring, assignment, layoff, termination or other employment decisions including specific review of these items with onsite supervisory personnel such as Superintendents, General Foremen, etc., prior to the initiation of construction work at any job site. A written record shall be made and maintained identifying the time and place of these meetings, persons attending, subject matter discussed, and disposition of the subject matter.

h. Disseminate the Contractor's EEO policy externally by including it in any advertising in the news media, specifically including minority and female news media, and providing written notification to and discussing the Contractor's EEO policy with other Contractors and Subcontractors with whom the Contractor does or anticipates doing business.

i. Direct its recruitment efforts, both oral and written, to minority, female and community organizations, to schools with minority and female students and to minority and female recruitment and training organizations serving the Contractor's recruitment area and employment needs. Not later than one month prior to the date for the acceptance of applications for apprenticeship or other training by any recruitment source, the Contractor shall send written notification to organizations such as the above, describing the openings, screening procedures, and tests to be used in the selection process.

j. Encourage present minority and female employees to recruit other minority persons and women and, where reasonable, provide after school, summer and vacation employment to minority and female youth both on the site and in other areas of a Contractor's work force.

k. Validate all tests and other selection requirements where there

l. Conduct, at least annually, an inventory and evaluation at least of all minority and female personnel for promotional opportunities and encourage these employees to seek or to prepare for, through appropriate training, etc., such opportunities.

m. Ensure that seniority practices, job classifications, work assignments and other personnel practices, do not have a discriminatory effect by continually monitoring all personnel and employment related activities to ensure that the EEO policy and the Contractor's obligations under these specifications are being carried out.

n. Ensure that all facilities and company activities are nonsegregated except that separate or single-user toilet and necessary changing facilities shall be provided to assure privacy between the sexes.

o. Document and maintain a record of all solicitations of offers for subcontracts from minority and female construction contractors and suppliers, including circulation of solicitations to minority and female contractor associations and other business associations.

p. Conduct a review, at least annually, of all supervisors' adherence to and performance under the Contractor's EEO policies and affirmative action obligations.

8. Contractors are encouraged to participate in voluntary associations which assist in fulfilling one or more of their affirmative action obligations (7a through p). The efforts of a contractor association, joint contractor-union, contractor-community, or other similar group of which the contractor is a member and participant, may be asserted as fulfilling any one or more of its obligations under 7a through p of these Specifications provided that the contractor actively participates in the group, makes every effort to assure that the group has a positive impact on the employment of minorities and women in the industry, ensures that the concrete benefits of the program are reflected in the Contractor's minority and female workforce participation, makes a good faith effort to meet its individual goals
and timetables, and can provide access to documentation which demonstrates the effectiveness of actions taken on behalf of the Contractor. The obligation to comply, however, is the Contractor's and failure of such a group to fulfill an obligation shall not be a defense for the Contractor's noncompliance.

9. A single goal for minorities and a separate single goal for women have been established. The Contractor, however, is required to provide equal employment opportunity and to take

affirmative action for all minority groups, both male and female, and all women, both minority and non-minority. Consequently, the Contractor may be in violation of the Executive Order if a particular group is employed in a substantially disparate manner (for example, even though the Contractor has achieved its goals for women generally, the Contractor may be in violation of the Executive Order if a specific minority group of women is underutilized).

10. The Contractor shall not use the goals and timetables or affirmative action standards to discriminate against any person because of race, color, religion, sex, or national origin.

11. The Contractor shall not enter into any Subcontract with any person or firm debarred from Government contracts pursuant to Executive Order 11246.

12. The Contractor shall carry out such sanctions and penalties for violation of these specifications and of the Equal Opportunity Clause, including suspension, termination and cancellation of existing subcontracts as may be imposed or ordered pursuant to Executive Order 11246, as amended, and its implementing regulations, by the Office of Federal Contract Compliance Programs. Any Contractor who fails to carry out such sanctions and penalties shall be in violation of these specifications and Executive Order 11246, as amended.

13. The Contractor, in fulfilling its obligations under these specifications, shall implement specific affirmative action steps, at least as extensive as those standards prescribed in paragraph 7 of these specifications, so as to achieve maximum results from its efforts to ensure equal employment opportunity. If the Contractor fails to comply with the requirements of the Executive Order, the implementing regulations, or these specifications, the Director shall proceed in accordance with 41 CFR 60-4.8.

14. The Contractor shall designate a responsible official to monitor all employment related activity to ensure that the company EEO policy is being carried out, to submit reports relating to the provisions hereof as may be required by the Government and to keep records. Records shall at least include for each employee the name, address, telephone numbers, construction trade, union affiliation if any, employee identification number when assigned, social security number, race, sex, status (e.g., mechanic, apprentice trainee, helper, or laborer), dates of changes in status, hours worked per week in the indicated trade, rate of pay, and locations at which the work was performed. Records shall be maintained in an easily understandable and retrievable form; however, to the degree that existing records satisfy this requirement, contractors shall not be required to maintain separate records.

15. Nothing herein provided shall be construed as a limitation upon the application of other laws which establish different standards of compliance or upon the application of requirements for the hiring of local or other area residents (e.g., those under the Public Works Employment Act of 1977 and the Community Development Block Grant Program).

(b) The notice set forth in 41 CFR 60-4.2 and the specifications set forth in 41 CFR 60-4.3 replace the New Form for Federal Equal Employment Opportunity Bid Conditions for Federal and Federally Assisted Construction published at 41 FR 32482 and commonly known as the Model Federal EEO Bid Conditions, and the New Form shall not be used after the regulations in 41 CFR Part 60-4 become effective.

[43 FR 49254, Oct. 20, 1978; 43 FR 51401, Nov. 3, 1978, as amended at 45
FR 65978, Oct. 3, 1980]

REQUIRED CONTRACT PROVISIONS
FEDERAL-AID CONSTRUCTION CONTRACTS

I. General
II. Nondiscrimination
III. Nonsegregated Facilities
IV. Davis-Bacon and Related Act Provisions
V. Contract Work Hours and Safety Standards Act Provisions
VI. Subletting or Assigning the Contract
VII. Safety: Accident Prevention
VIII. False Statements Concerning Highway Projects
IX. Implementation of Clean Air Act and Federal Water Pollution Control Act
X. Compliance with Governmentwide Suspension and Debarment Requirements
XI. Certification Regarding Use of Contract Funds for Lobbying

ATTACHMENTS

A. Employment and Materials Preference for Appalachian Development Highway System or Appalachian Local Access Road Contracts (included in Appalachian contracts only)

I. GENERAL

1. Form FHWA-1273 must be physically incorporated in each construction contract funded under Title 23 (excluding emergency contracts solely intended for debris removal). The contractor (or subcontractor) must insert this form in each subcontract and further require its inclusion in all lower tier subcontracts (excluding purchase orders, rental agreements and other agreements for supplies or services).

The applicable requirements of Form FHWA-1273 are incorporated by reference for work done under any purchase order, rental agreement or agreement for other services. The prime contractor shall be responsible for compliance by any subcontractor, lower-tier subcontractor or service provider.

Form FHWA-1273 must be included in all Federal-aid design-build contracts, in all subcontracts and in lower tier subcontracts (excluding subcontracts for design services, purchase orders, rental agreements and other agreements for supplies or services). The design-builder shall be responsible for compliance by any subcontractor, lower-tier subcontractor or service provider.

Contracting agencies may reference Form FHWA-1273 in bid proposal or request for proposal documents, however, the Form FHWA-1273 must be physically incorporated (not referenced) in all contracts, subcontracts and lower-tier subcontracts (excluding purchase orders, rental agreements and other agreements for supplies or services related to a construction contract).

2. Subject to the applicability criteria noted in the following sections, these contract provisions shall apply to all work performed on the contract by the contractor's own organization and with the assistance of workers under the contractor's immediate superintendence and to all work performed on the contract by piecework, station work, or by subcontract.

3. A breach of any of the stipulations contained in these Required Contract Provisions may be sufficient grounds for withholding of progress payments, withholding of final payment, termination of the contract, suspension / debarment or any other action determined to be appropriate by the contracting agency and FHWA.

4. Selection of Labor: During the performance of this contract, the contractor shall not use convict labor for any purpose within the limits of a construction project on a Federal-aid highway unless it is labor performed by convicts who are on parole, supervised release, or probation. The term Federal-aid highway does not include roadways functionally classified as local roads or rural minor collectors.

II. NONDISCRIMINATION

The provisions of this section related to 23 CFR Part 230 are applicable to all Federal-aid construction contracts and to all related construction subcontracts of $10,000 or more. The provisions of 23 CFR Part 230 are not applicable to material supply, engineering, or architectural service contracts.

In addition, the contractor and all subcontractors must comply with the following policies: Executive Order 11246, 41 CFR 60, 29 CFR 1625-1627, Title 23 USC Section 140, the Rehabilitation Act of 1973, as amended (29 USC 794), Title VI of the Civil Rights Act of 1964, as amended, and related regulations including 49 CFR Parts 21, 26 and 27; and 23 CFR Parts 200, 230, and 633.

The contractor and all subcontractors must comply with: the requirements of the Equal Opportunity Clause in 41 CFR 60-1.4(b) and, for all construction contracts exceeding $10,000, the Standard Federal Equal Employment Opportunity Construction Contract Specifications in 41 CFR 60-4.3.

Note: The U.S. Department of Labor has exclusive authority to determine compliance with Executive Order 11246 and the policies of the Secretary of Labor including 41 CFR 60, and 29 CFR 1625-1627. The contracting agency and the FHWA have the authority and the responsibility to ensure compliance with Title 23 USC Section 140, the Rehabilitation Act of 1973, as amended (29 USC 794), and Title VI of the Civil Rights Act of 1964, as amended, and related regulations including 49 CFR Parts 21, 26 and 27; and 23 CFR Parts 200, 230, and 633.

The following provision is adopted from 23 CFR 230, Appendix A, with appropriate revisions to conform to the U.S. Department of Labor (US DOL) and FHWA requirements.

1. Equal Employment Opportunity: Equal employment opportunity (EEO) requirements not to discriminate and to take affirmative action to assure equal opportunity as set forth under laws, executive orders, rules, regulations (28 CFR 35, 29 CFR 1630, 29 CFR 1625-1627, 41 CFR 60 and 49 CFR 27) and orders of the Secretary of Labor as modified by the provisions prescribed herein, and imposed pursuant to 23 U.S.C. 140 shall constitute the EEO and specific affirmative action standards for the contractor's project activities under

this contract. The provisions of the Americans with Disabilities Act of 1990 (42 U.S.C. 12101 et seq.) set forth under 28 CFR 35 and 29 CFR 1630 are incorporated by reference in this contract. In the execution of this contract, the contractor agrees to comply with the following minimum specific requirement activities of EEO:

a. The contractor will work with the contracting agency and the Federal Government to ensure that it has made every good faith effort to provide equal opportunity with respect to all of its terms and conditions of employment and in their review of activities under the contract.

b. The contractor will accept as its operating policy the following statement:

"It is the policy of this Company to assure that applicants are employed, and that employees are treated during employment, without regard to their race, religion, sex, color, national origin, age or disability. Such action shall include: employment, upgrading, demotion, or transfer; recruitment or recruitment advertising; layoff or termination; rates of pay or other forms of compensation; and selection for training, including apprenticeship, pre-apprenticeship, and/or on-the-job training."

2. EEO Officer: The contractor will designate and make known to the contracting officers an EEO Officer who will have the responsibility for and must be capable of effectively administering and promoting an active EEO program and who must be assigned adequate authority and responsibility to do so.

3. Dissemination of Policy: All members of the contractor's staff who are authorized to hire, supervise, promote, and discharge employees, or who recommend such action, or who are substantially involved in such action, will be made fully cognizant of, and will implement, the contractor's EEO policy and contractual responsibilities to provide EEO in each grade and classification of employment. To ensure that the above agreement will be met, the following actions will be taken as a minimum:

a. Periodic meetings of supervisory and personnel office employees will be conducted before the start of work and then not less often than once every six months, at which time the contractor's EEO policy and its implementation will be reviewed and explained. The meetings will be conducted by the EEO Officer.

b. All new supervisory or personnel office employees will be given a thorough indoctrination by the EEO Officer, covering all major aspects of the contractor's EEO obligations within thirty days following their reporting for duty with the contractor.

c. All personnel who are engaged in direct recruitment for the project will be instructed by the EEO Officer in the contractor's procedures for locating and hiring minorities and women.

d. Notices and posters setting forth the contractor's EEO policy will be placed in areas readily accessible to employees, applicants for employment and potential employees.

e. The contractor's EEO policy and the procedures to implement such policy will be brought to the attention of employees by means of meetings, employee handbooks, or other appropriate means.

4. Recruitment: When advertising for employees, the contractor will include in all advertisements for employees the notation: "An Equal Opportunity Employer." All such advertisements will be placed in publications having a large circulation among minorities and women in the area from which the project work force would normally be derived.

a. The contractor will, unless precluded by a valid bargaining agreement, conduct systematic and direct recruitment through public and private employee referral sources likely to yield qualified minorities and women. To meet this requirement, the contractor will identify sources of potential minority group employees, and establish with such identified sources procedures whereby minority and women applicants may be referred to the contractor for employment consideration.

b. In the event the contractor has a valid bargaining agreement providing for exclusive hiring hall referrals, the contractor is expected to observe the provisions of that agreement to the extent that the system meets the contractor's compliance with EEO contract provisions. Where implementation of such an agreement has the effect of discriminating against minorities or women, or obligates the contractor to do the same, such implementation violates Federal nondiscrimination provisions.

c. The contractor will encourage its present employees to refer minorities and women as applicants for employment. Information and procedures with regard to referring such applicants will be discussed with employees.

5. Personnel Actions: Wages, working conditions, and employee benefits shall be established and administered, and personnel actions of every type, including hiring, upgrading, promotion, transfer, demotion, layoff, and termination, shall be taken without regard to race, color, religion, sex, national origin, age or disability. The following procedures shall be followed:

a. The contractor will conduct periodic inspections of project sites to insure that working conditions and employee facilities do not indicate discriminatory treatment of project site personnel.

b. The contractor will periodically evaluate the spread of wages paid within each classification to determine any evidence of discriminatory wage practices.

c. The contractor will periodically review selected personnel actions in depth to determine whether there is evidence of discrimination. Where evidence is found, the contractor will promptly take corrective action. If the review indicates that the discrimination may extend beyond the actions reviewed, such corrective action shall include all affected persons.

d. The contractor will promptly investigate all complaints of alleged discrimination made to the contractor in connection with its obligations under this contract, will attempt to resolve such complaints, and will take appropriate corrective action within a reasonable time. If the investigation indicates that the discrimination may affect persons other than the complainant, such corrective action shall include such other persons. Upon completion of each investigation, the contractor will inform every complainant of all of their avenues of appeal.

6. Training and Promotion:

a. The contractor will assist in locating, qualifying, and increasing the skills of minorities and women who are

applicants for employment or current employees. Such efforts should be aimed at developing full journey level status employees in the type of trade or job classification involved.

b. Consistent with the contractor's work force requirements and as permissible under Federal and State regulations, the contractor shall make full use of training programs, i.e., apprenticeship, and on-the-job training programs for the geographical area of contract performance. In the event a special provision for training is provided under this contract, this subparagraph will be superseded as indicated in the special provision. The contracting agency may reserve training positions for persons who receive welfare assistance in accordance with 23 U.S.C. 140(a).

c. The contractor will advise employees and applicants for employment of available training programs and entrance requirements for each.

d. The contractor will periodically review the training and promotion potential of employees who are minorities and women and will encourage eligible employees to apply for such training and promotion.

7. Unions: If the contractor relies in whole or in part upon unions as a source of employees, the contractor will use good faith efforts to obtain the cooperation of such unions to increase opportunities for minorities and women. Actions by the contractor, either directly or through a contractor's association acting as agent, will include the procedures set forth below:

a. The contractor will use good faith efforts to develop, in cooperation with the unions, joint training programs aimed toward qualifying more minorities and women for membership in the unions and increasing the skills of minorities and women so that they may qualify for higher paying employment.

b. The contractor will use good faith efforts to incorporate an EEO clause into each union agreement to the end that such union will be contractually bound to refer applicants without regard to their race, color, religion, sex, national origin, age or disability.

c. The contractor is to obtain information as to the referral practices and policies of the labor union except that to the extent such information is within the exclusive possession of the labor union and such labor union refuses to furnish such information to the contractor, the contractor shall so certify to the contracting agency and shall set forth what efforts have been made to obtain such information.

d. In the event the union is unable to provide the contractor with a reasonable flow of referrals within the time limit set forth in the collective bargaining agreement, the contractor will, through independent recruitment efforts, fill the employment vacancies without regard to race, color, religion, sex, national origin, age or disability; making full efforts to obtain qualified and/or qualifiable minorities and women. The failure of a union to provide sufficient referrals (even though it is obligated to provide exclusive referrals under the terms of a collective bargaining agreement) does not relieve the contractor from the requirements of this paragraph. In the event the union referral practice prevents the contractor from meeting the obligations pursuant to Executive Order 11246, as amended, and these special provisions, such contractor shall immediately notify the contracting agency.

8. Reasonable Accommodation for Applicants / Employees with Disabilities: The contractor must be familiar with the requirements for and comply with the Americans with Disabilities Act and all rules and regulations established there under. Employers must provide reasonable accommodation in all employment activities unless to do so would cause an undue hardship.

9. Selection of Subcontractors, Procurement of Materials and Leasing of Equipment: The contractor shall not discriminate on the grounds of race, color, religion, sex, national origin, age or disability in the selection and retention of subcontractors, including procurement of materials and leases of equipment. The contractor shall take all necessary and reasonable steps to ensure nondiscrimination in the administration of this contract.

a. The contractor shall notify all potential subcontractors and suppliers and lessors of their EEO obligations under this contract.

b. The contractor will use good faith efforts to ensure subcontractor compliance with their EEO obligations.

10. Assurance Required by 49 CFR 26.13(b):

a. The requirements of 49 CFR Part 26 and the State DOT's U.S. DOT-approved DBE program are incorporated by reference.

b. The contractor or subcontractor shall not discriminate on the basis of race, color, national origin, or sex in the performance of this contract. The contractor shall carry out applicable requirements of 49 CFR Part 26 in the award and administration of DOT-assisted contracts. Failure by the contractor to carry out these requirements is a material breach of this contract, which may result in the termination of this contract or such other remedy as the contracting agency deems appropriate.

11. Records and Reports: The contractor shall keep such records as necessary to document compliance with the EEO requirements. Such records shall be retained for a period of three years following the date of the final payment to the contractor for all contract work and shall be available at reasonable times and places for inspection by authorized representatives of the contracting agency and the FHWA.

a. The records kept by the contractor shall document the following:

(1) The number and work hours of minority and non-minority group members and women employed in each work classification on the project;

(2) The progress and efforts being made in cooperation with unions, when applicable, to increase employment opportunities for minorities and women; and

(3) The progress and efforts being made in locating, hiring, training, qualifying, and upgrading minorities and women;

b. The contractors and subcontractors will submit an annual report to the contracting agency each July for the duration of the project, indicating the number of minority, women, and non-minority group employees currently engaged in each work classification required by the contract work. This information is to be reported on Form FHWA-1391. The staffing data should represent the project work force on board in all or any part of the last payroll period preceding the end of July. If on-the-job training is being required by special provision, the contractor

will be required to collect and report training data. The employment data should reflect the work force on board during all or any part of the last payroll period preceding the end of July.

III. NONSEGREGATED FACILITIES

This provision is applicable to all Federal-aid construction contracts and to all related construction subcontracts of $10,000 or more.

The contractor must ensure that facilities provided for employees are provided in such a manner that segregation on the basis of race, color, religion, sex, or national origin cannot result. The contractor may neither require such segregated use by written or oral policies nor tolerate such use by employee custom. The contractor's obligation extends further to ensure that its employees are not assigned to perform their services at any location, under the contractor's control, where the facilities are segregated. The term "facilities" includes waiting rooms, work areas, restaurants and other eating areas, time clocks, restrooms, washrooms, locker rooms, and other storage or dressing areas, parking lots, drinking fountains, recreation or entertainment areas, transportation, and housing provided for employees. The contractor shall provide separate or single-user restrooms and necessary dressing or sleeping areas to assure privacy between sexes.

IV. DAVIS-BACON AND RELATED ACT PROVISIONS

This section is applicable to all Federal-aid construction projects exceeding $2,000 and to all related subcontracts and lower-tier subcontracts (regardless of subcontract size). The requirements apply to all projects located within the right-of-way of a roadway that is functionally classified as Federal-aid highway. This excludes roadways functionally classified as local roads or rural minor collectors, which are exempt. Contracting agencies may elect to apply these requirements to other projects.

The following provisions are from the U.S. Department of Labor regulations in 29 CFR 5.5 "Contract provisions and related matters" with minor revisions to conform to the FHWA-1273 format and FHWA program requirements.

1. Minimum wages

a. All laborers and mechanics employed or working upon the site of the work, will be paid unconditionally and not less often than once a week, and without subsequent deduction or rebate on any account (except such payroll deductions as are permitted by regulations issued by the Secretary of Labor under the Copeland Act (29 CFR part 3)), the full amount of wages and bona fide fringe benefits (or cash equivalents thereof) due at time of payment computed at rates not less than those contained in the wage determination of the Secretary of Labor which is attached hereto and made a part hereof, regardless of any contractual relationship which may be alleged to exist between the contractor and such laborers and mechanics.

Contributions made or costs reasonably anticipated for bona fide fringe benefits under section 1(b)(2) of the Davis-Bacon Act on behalf of laborers or mechanics are considered wages paid to such laborers or mechanics, subject to the provisions of paragraph 1.d. of this section; also, regular contributions made or costs incurred for more than a weekly period (but not less often than quarterly) under plans, funds, or programs which cover the particular weekly period, are deemed to be constructively made or incurred during such weekly period. Such laborers and mechanics shall be paid the appropriate wage rate and fringe benefits on the wage determination for the classification of work actually performed, without regard to skill, except as provided in 29 CFR 5.5(a)(4). Laborers or mechanics performing work in more than one classification may be compensated at the rate specified for each classification for the time actually worked therein: Provided, That the employer's payroll records accurately set forth the time spent in each classification in which work is performed. The wage determination (including any additional classification and wage rates conformed under paragraph 1.b. of this section) and the Davis-Bacon poster (WH–1321) shall be posted at all times by the contractor and its subcontractors at the site of the work in a prominent and accessible place where it can be easily seen by the workers.

b.(1) The contracting officer shall require that any class of laborers or mechanics, including helpers, which is not listed in the wage determination and which is to be employed under the contract shall be classified in conformance with the wage determination. The contracting officer shall approve an additional classification and wage rate and fringe benefits therefore only when the following criteria have been met:

(i) The work to be performed by the classification requested is not performed by a classification in the wage determination; and

(ii) The classification is utilized in the area by the construction industry; and

(iii) The proposed wage rate, including any bona fide fringe benefits, bears a reasonable relationship to the wage rates contained in the wage determination.

(2) If the contractor and the laborers and mechanics to be employed in the classification (if known), or their representatives, and the contracting officer agree on the classification and wage rate (including the amount designated for fringe benefits where appropriate), a report of the action taken shall be sent by the contracting officer to the Administrator of the Wage and Hour Division, Employment Standards Administration, U.S. Department of Labor, Washington, DC 20210. The Administrator, or an authorized representative, will approve, modify, or disapprove every additional classification action within 30 days of receipt and so advise the contracting officer or will notify the contracting officer within the 30-day period that additional time is necessary.

(3) In the event the contractor, the laborers or mechanics to be employed in the classification or their representatives, and the contracting officer do not agree on the proposed classification and wage rate (including the amount designated for fringe benefits, where appropriate), the contracting officer shall refer the questions, including the views of all interested parties and the recommendation of the contracting officer, to the Wage and Hour Administrator for determination. The Wage and Hour Administrator, or an authorized representative, will issue a determination within 30 days of receipt and so advise the contracting officer or

will notify the contracting officer within the 30-day period that additional time is necessary.

(4) The wage rate (including fringe benefits where appropriate) determined pursuant to paragraphs 1.b.(2) or 1.b.(3) of this section, shall be paid to all workers performing work in the classification under this contract from the first day on which work is performed in the classification.

c. Whenever the minimum wage rate prescribed in the contract for a class of laborers or mechanics includes a fringe benefit which is not expressed as an hourly rate, the contractor shall either pay the benefit as stated in the wage determination or shall pay another bona fide fringe benefit or an hourly cash equivalent thereof.

d. If the contractor does not make payments to a trustee or other third person, the contractor may consider as part of the wages of any laborer or mechanic the amount of any costs reasonably anticipated in providing bona fide fringe benefits under a plan or program, Provided, That the Secretary of Labor has found, upon the written request of the contractor, that the applicable standards of the Davis-Bacon Act have been met. The Secretary of Labor may require the contractor to set aside in a separate account assets for the meeting of obligations under the plan or program.

2. Withholding

The contracting agency shall upon its own action or upon written request of an authorized representative of the Department of Labor, withhold or cause to be withheld from the contractor under this contract, or any other Federal contract with the same prime contractor, or any other federally-assisted contract subject to Davis-Bacon prevailing wage requirements, which is held by the same prime contractor, so much of the accrued payments or advances as may be considered necessary to pay laborers and mechanics, including apprentices, trainees, and helpers, employed by the contractor or any subcontractor the full amount of wages required by the contract. In the event of failure to pay any laborer or mechanic, including any apprentice, trainee, or helper, employed or working on the site of the work, all or part of the wages required by the contract, the contracting agency may, after written notice to the contractor, take such action as may be necessary to cause the suspension of any further payment, advance, or guarantee of funds until such violations have ceased.

3. Payrolls and basic records

a. Payrolls and basic records relating thereto shall be maintained by the contractor during the course of the work and preserved for a period of three years thereafter for all laborers and mechanics working at the site of the work. Such records shall contain the name, address, and social security number of each such worker, his or her correct classification, hourly rates of wages paid (including rates of contributions or costs anticipated for bona fide fringe benefits or cash equivalents thereof of the types described in section 1(b)(2)(B) of the Davis-Bacon Act), daily and weekly number of hours worked, deductions made and actual wages paid. Whenever the Secretary of Labor has found under 29 CFR 5.5(a)(1)(iv) that the wages of any laborer or mechanic include the amount of any costs reasonably anticipated in providing benefits under a plan or program described in section 1(b)(2)(B) of the Davis-Bacon Act, the contractor shall maintain records which show that the commitment to provide such benefits is enforceable, that the plan or program is financially responsible, and that the plan or program has been communicated in writing to the laborers or mechanics affected, and records which show the costs anticipated or the actual cost incurred in providing such benefits. Contractors employing apprentices or trainees under approved programs shall maintain written evidence of the registration of apprenticeship programs and certification of trainee programs, the registration of the apprentices and trainees, and the ratios and wage rates prescribed in the applicable programs.

b.(1) The contractor shall submit weekly for each week in which any contract work is performed a copy of all payrolls to the contracting agency. The payrolls submitted shall set out accurately and completely all of the information required to be maintained under 29 CFR 5.5(a)(3)(i), except that full social security numbers and home addresses shall not be included on weekly transmittals. Instead the payrolls shall only need to include an individually identifying number for each employee (e.g. , the last four digits of the employee's social security number). The required weekly payroll information may be submitted in any form desired. Optional Form WH–347 is available for this purpose from the Wage and Hour Division Web site at http://www.dol.gov/esa/whd/forms/wh347instr.htm or its successor site. The prime contractor is responsible for the submission of copies of payrolls by all subcontractors. Contractors and subcontractors shall maintain the full social security number and current address of each covered worker, and shall provide them upon request to the contracting agency for transmission to the State DOT, the FHWA or the Wage and Hour Division of the Department of Labor for purposes of an investigation or audit of compliance with prevailing wage requirements. It is not a violation of this section for a prime contractor to require a subcontractor to provide addresses and social security numbers to the prime contractor for its own records, without weekly submission to the contracting agency..

(2) Each payroll submitted shall be accompanied by a "Statement of Compliance," signed by the contractor or subcontractor or his or her agent who pays or supervises the payment of the persons employed under the contract and shall certify the following:

(i) That the payroll for the payroll period contains the information required to be provided under §5.5 (a)(3)(ii) of Regulations, 29 CFR part 5, the appropriate information is being maintained under §5.5 (a)(3)(i) of Regulations, 29 CFR part 5, and that such information is correct and complete;

(ii) That each laborer or mechanic (including each helper, apprentice, and trainee) employed on the contract during the payroll period has been paid the full weekly wages earned, without rebate, either directly or indirectly, and that no deductions have been made either directly or indirectly from the full wages earned, other than permissible deductions as set forth in Regulations, 29 CFR part 3;

(iii) That each laborer or mechanic has been paid not less than the applicable wage rates and fringe benefits or cash equivalents for the classification of work performed, as specified in the applicable wage determination incorporated into the contract.

(3) The weekly submission of a properly executed certification set forth on the reverse side of Optional Form WH–347 shall satisfy the requirement for submission of the "Statement of Compliance" required by paragraph 3.b.(2) of this section.

(4) The falsification of any of the above certifications may subject the contractor or subcontractor to civil or criminal prosecution under section 1001 of title 18 and section 231 of title 31 of the United States Code.

c. The contractor or subcontractor shall make the records required under paragraph 3.a. of this section available for inspection, copying, or transcription by authorized representatives of the contracting agency, the State DOT, the FHWA, or the Department of Labor, and shall permit such representatives to interview employees during working hours on the job. If the contractor or subcontractor fails to submit the required records or to make them available, the FHWA may, after written notice to the contractor, the contracting agency or the State DOT, take such action as may be necessary to cause the suspension of any further payment, advance, or guarantee of funds. Furthermore, failure to submit the required records upon request or to make such records available may be grounds for debarment action pursuant to 29 CFR 5.12.

4. Apprentices and trainees

a. Apprentices (programs of the USDOL).

Apprentices will be permitted to work at less than the predetermined rate for the work they performed when they are employed pursuant to and individually registered in a bona fide apprenticeship program registered with the U.S. Department of Labor, Employment and Training Administration, Office of Apprenticeship Training, Employer and Labor Services, or with a State Apprenticeship Agency recognized by the Office, or if a person is employed in his or her first 90 days of probationary employment as an apprentice in such an apprenticeship program, who is not individually registered in the program, but who has been certified by the Office of Apprenticeship Training, Employer and Labor Services or a State Apprenticeship Agency (where appropriate) to be eligible for probationary employment as an apprentice.

The allowable ratio of apprentices to journeymen on the job site in any craft classification shall not be greater than the ratio permitted to the contractor as to the entire work force under the registered program. Any worker listed on a payroll at an apprentice wage rate, who is not registered or otherwise employed as stated above, shall be paid not less than the applicable wage rate on the wage determination for the classification of work actually performed. In addition, any apprentice performing work on the job site in excess of the ratio permitted under the registered program shall be paid not less than the applicable wage rate on the wage determination for the work actually performed. Where a contractor is performing construction on a project in a locality other than that in which its program is registered, the ratios and wage rates (expressed in percentages of the journeyman's hourly rate) specified in the contractor's or subcontractor's registered program shall be observed.

Every apprentice must be paid at not less than the rate specified in the registered program for the apprentice's level of progress, expressed as a percentage of the journeymen hourly rate specified in the applicable wage determination. Apprentices shall be paid fringe benefits in accordance with the provisions of the apprenticeship program. If the apprenticeship program does not specify fringe benefits, apprentices must be paid the full amount of fringe benefits listed on the wage determination for the applicable classification. If the Administrator determines that a different practice prevails for the applicable apprentice classification, fringes shall be paid in accordance with that determination.

In the event the Office of Apprenticeship Training, Employer and Labor Services, or a State Apprenticeship Agency recognized by the Office, withdraws approval of an apprenticeship program, the contractor will no longer be permitted to utilize apprentices at less than the applicable predetermined rate for the work performed until an acceptable program is approved.

b. Trainees (programs of the USDOL).

Except as provided in 29 CFR 5.16, trainees will not be permitted to work at less than the predetermined rate for the work performed unless they are employed pursuant to and individually registered in a program which has received prior approval, evidenced by formal certification by the U.S. Department of Labor, Employment and Training Administration.

The ratio of trainees to journeymen on the job site shall not be greater than permitted under the plan approved by the Employment and Training Administration.

Every trainee must be paid at not less than the rate specified in the approved program for the trainee's level of progress, expressed as a percentage of the journeyman hourly rate specified in the applicable wage determination. Trainees shall be paid fringe benefits in accordance with the provisions of the trainee program. If the trainee program does not mention fringe benefits, trainees shall be paid the full amount of fringe benefits listed on the wage determination unless the Administrator of the Wage and Hour Division determines that there is an apprenticeship program associated with the corresponding journeyman wage rate on the wage determination which provides for less than full fringe benefits for apprentices. Any employee listed on the payroll at a trainee rate who is not registered and participating in a training plan approved by the Employment and Training Administration shall be paid not less than the applicable wage rate on the wage determination for the classification of work actually performed. In addition, any trainee performing work on the job site in excess of the ratio permitted under the registered program shall be paid not less than the applicable wage rate on the wage determination for the work actually performed.

In the event the Employment and Training Administration withdraws approval of a training program, the contractor will no longer be permitted to utilize trainees at less than the applicable predetermined rate for the work performed until an acceptable program is approved.

c. Equal employment opportunity. The utilization of apprentices, trainees and journeymen under this part shall be in conformity with the equal employment opportunity requirements of Executive Order 11246, as amended, and 29 CFR part 30.

d. Apprentices and Trainees (programs of the U.S. DOT).

Apprentices and trainees working under apprenticeship and skill training programs which have been certified by the Secretary of Transportation as promoting EEO in connection with Federal-aid highway construction programs are not subject to the requirements of paragraph 4 of this Section IV. The straight time hourly wage rates for apprentices and trainees under such programs will be established by the particular programs. The ratio of apprentices and trainees to journeymen shall not be greater than permitted by the terms of the particular program.

5. Compliance with Copeland Act requirements. The contractor shall comply with the requirements of 29 CFR part 3, which are incorporated by reference in this contract.

6. Subcontracts. The contractor or subcontractor shall insert Form FHWA-1273 in any subcontracts and also require the subcontractors to include Form FHWA-1273 in any lower tier subcontracts. The prime contractor shall be responsible for the compliance by any subcontractor or lower tier subcontractor with all the contract clauses in 29 CFR 5.5.

7. Contract termination: debarment. A breach of the contract clauses in 29 CFR 5.5 may be grounds for termination of the contract, and for debarment as a contractor and a subcontractor as provided in 29 CFR 5.12.

8. Compliance with Davis-Bacon and Related Act requirements. All rulings and interpretations of the Davis-Bacon and Related Acts contained in 29 CFR parts 1, 3, and 5 are herein incorporated by reference in this contract.

9. Disputes concerning labor standards. Disputes arising out of the labor standards provisions of this contract shall not be subject to the general disputes clause of this contract. Such disputes shall be resolved in accordance with the procedures of the Department of Labor set forth in 29 CFR parts 5, 6, and 7. Disputes within the meaning of this clause include disputes between the contractor (or any of its subcontractors) and the contracting agency, the U.S. Department of Labor, or the employees or their representatives.

10. Certification of eligibility.

a. By entering into this contract, the contractor certifies that neither it (nor he or she) nor any person or firm who has an interest in the contractor's firm is a person or firm ineligible to be awarded Government contracts by virtue of section 3(a) of the Davis-Bacon Act or 29 CFR 5.12(a)(1).

b. No part of this contract shall be subcontracted to any person or firm ineligible for award of a Government contract by virtue of section 3(a) of the Davis-Bacon Act or 29 CFR 5.12(a)(1).

c. The penalty for making false statements is prescribed in the U.S. Criminal Code, 18 U.S.C. 1001.

V. CONTRACT WORK HOURS AND SAFETY STANDARDS ACT

The following clauses apply to any Federal-aid construction contract in an amount in excess of $100,000 and subject to the overtime provisions of the Contract Work Hours and Safety Standards Act. These clauses shall be inserted in addition to the clauses required by 29 CFR 5.5(a) or 29 CFR 4.6. As used in this paragraph, the terms laborers and mechanics include watchmen and guards.

1. Overtime requirements. No contractor or subcontractor contracting for any part of the contract work which may require or involve the employment of laborers or mechanics shall require or permit any such laborer or mechanic in any workweek in which he or she is employed on such work to work in excess of forty hours in such workweek unless such laborer or mechanic receives compensation at a rate not less than one and one-half times the basic rate of pay for all hours worked in excess of forty hours in such workweek.

2. Violation; liability for unpaid wages; liquidated damages. In the event of any violation of the clause set forth in paragraph (1.) of this section, the contractor and any subcontractor responsible therefor shall be liable for the unpaid wages. In addition, such contractor and subcontractor shall be liable to the United States (in the case of work done under contract for the District of Columbia or a territory, to such District or to such territory), for liquidated damages. Such liquidated damages shall be computed with respect to each individual laborer or mechanic, including watchmen and guards, employed in violation of the clause set forth in paragraph (1.) of this section, in the sum of $10 for each calendar day on which such individual was required or permitted to work in excess of the standard workweek of forty hours without payment of the overtime wages required by the clause set forth in paragraph (1.) of this section.

3. Withholding for unpaid wages and liquidated damages. The FHWA or the contacting agency shall upon its own action or upon written request of an authorized representative of the Department of Labor withhold or cause to be withheld, from any moneys payable on account of work performed by the contractor or subcontractor under any such contract or any other Federal contract with the same prime contractor, or any other federally-assisted contract subject to the Contract Work Hours and Safety Standards Act, which is held by the same prime contractor, such sums as may be determined to be necessary to satisfy any liabilities of such contractor or subcontractor for unpaid wages and liquidated damages as provided in the clause set forth in paragraph (2.) of this section.

4. Subcontracts. The contractor or subcontractor shall insert in any subcontracts the clauses set forth in paragraph (1.) through (4.) of this section and also a clause requiring the subcontractors to include these clauses in any lower tier subcontracts. The prime contractor shall be responsible for compliance by any subcontractor or lower tier subcontractor with the clauses set forth in paragraphs (1.) through (4.) of this section.

VI. SUBLETTING OR ASSIGNING THE CONTRACT

This provision is applicable to all Federal-aid construction contracts on the National Highway System.

1. The contractor shall perform with its own organization contract work amounting to not less than 30 percent (or a greater percentage if specified elsewhere in the contract) of the total original contract price, excluding any specialty items designated by the contracting agency. Specialty items may be performed by subcontract and the amount of any such specialty items performed may be deducted from the total original contract price before computing the amount of work required to be performed by the contractor's own organization (23 CFR 635.116).

a. The term "perform work with its own organization" refers to workers employed or leased by the prime contractor, and equipment owned or rented by the prime contractor, with or without operators. Such term does not include employees or equipment of a subcontractor or lower tier subcontractor, agents of the prime contractor, or any other assignees. The term may include payments for the costs of hiring leased employees from an employee leasing firm meeting all relevant Federal and State regulatory requirements. Leased employees may only be included in this term if the prime contractor meets all of the following conditions:

(1) the prime contractor maintains control over the supervision of the day-to-day activities of the leased employees;
(2) the prime contractor remains responsible for the quality of the work of the leased employees;
(3) the prime contractor retains all power to accept or exclude individual employees from work on the project; and
(4) the prime contractor remains ultimately responsible for the payment of predetermined minimum wages, the submission of payrolls, statements of compliance and all other Federal regulatory requirements.

b. "Specialty Items" shall be construed to be limited to work that requires highly specialized knowledge, abilities, or equipment not ordinarily available in the type of contracting organizations qualified and expected to bid or propose on the contract as a whole and in general are to be limited to minor components of the overall contract.

2. The contract amount upon which the requirements set forth in paragraph (1) of Section VI is computed includes the cost of material and manufactured products which are to be purchased or produced by the contractor under the contract provisions.

3. The contractor shall furnish (a) a competent superintendent or supervisor who is employed by the firm, has full authority to direct performance of the work in accordance with the contract requirements, and is in charge of all construction operations (regardless of who performs the work) and (b) such other of its own organizational resources (supervision, management, and engineering services) as the contracting officer determines is necessary to assure the performance of the contract.

4. No portion of the contract shall be sublet, assigned or otherwise disposed of except with the written consent of the contracting officer, or authorized representative, and such consent when given shall not be construed to relieve the contractor of any responsibility for the fulfillment of the contract. Written consent will be given only after the contracting agency has assured that each subcontract is evidenced in writing and that it contains all pertinent provisions and requirements of the prime contract.

5. The 30% self-performance requirement of paragraph (1) is not applicable to design-build contracts; however, contracting agencies may establish their own self-performance requirements.

VII. SAFETY: ACCIDENT PREVENTION

This provision is applicable to all Federal-aid construction contracts and to all related subcontracts.

1. In the performance of this contract the contractor shall comply with all applicable Federal, State, and local laws governing safety, health, and sanitation (23 CFR 635). The contractor shall provide all safeguards, safety devices and protective equipment and take any other needed actions as it determines, or as the contracting officer may determine, to be reasonably necessary to protect the life and health of employees on the job and the safety of the public and to protect property in connection with the performance of the work covered by the contract.

2. It is a condition of this contract, and shall be made a condition of each subcontract, which the contractor enters into pursuant to this contract, that the contractor and any subcontractor shall not permit any employee, in performance of the contract, to work in surroundings or under conditions which are unsanitary, hazardous or dangerous to his/her health or safety, as determined under construction safety and health standards (29 CFR 1926) promulgated by the Secretary of Labor, in accordance with Section 107 of the Contract Work Hours and Safety Standards Act (40 U.S.C. 3704).

3. Pursuant to 29 CFR 1926.3, it is a condition of this contract that the Secretary of Labor or authorized representative thereof, shall have right of entry to any site of contract performance to inspect or investigate the matter of compliance with the construction safety and health standards and to carry out the duties of the Secretary under Section 107 of the Contract Work Hours and Safety Standards Act (40 U.S.C.3704).

VIII. FALSE STATEMENTS CONCERNING HIGHWAY PROJECTS

This provision is applicable to all Federal-aid construction contracts and to all related subcontracts.

In order to assure high quality and durable construction in conformity with approved plans and specifications and a high degree of reliability on statements and representations made by engineers, contractors, suppliers, and workers on Federal-aid highway projects, it is essential that all persons concerned with the project perform their functions as carefully, thoroughly, and honestly as possible. Willful falsification, distortion, or misrepresentation with respect to any facts related to the project is a violation of Federal law. To prevent any misunderstanding regarding the seriousness of these and similar acts, Form FHWA-1022 shall be posted on each Federal-aid highway project (23 CFR 635) in one or more places where it is readily available to all persons concerned with the project:

18 U.S.C. 1020 reads as follows:

"Whoever, being an officer, agent, or employee of the United States, or of any State or Territory, or whoever, whether a person, association, firm, or corporation, knowingly makes any false statement, false representation, or false report as to the character, quality, quantity, or cost of the material used or to be used, or the quantity or quality of the work performed or to be performed, or the cost thereof in connection with the submission of plans, maps, specifications, contracts, or costs of construction on any highway or related project submitted for approval to the Secretary of Transportation; or

Whoever knowingly makes any false statement, false representation, false report or false claim with respect to the character, quality, quantity, or cost of any work performed or to be performed, or materials furnished or to be furnished, in connection with the construction of any highway or related project approved by the Secretary of Transportation; or

Whoever knowingly makes any false statement or false representation as to material fact in any statement, certificate, or report submitted pursuant to provisions of the Federal-aid Roads Act approved July 1, 1916, (39 Stat. 355), as amended and supplemented;

Shall be fined under this title or imprisoned not more than 5 years or both."

IX. IMPLEMENTATION OF CLEAN AIR ACT AND FEDERAL WATER POLLUTION CONTROL ACT

This provision is applicable to all Federal-aid construction contracts and to all related subcontracts.

By submission of this bid/proposal or the execution of this contract, or subcontract, as appropriate, the bidder, proposer, Federal-aid construction contractor, or subcontractor, as appropriate, will be deemed to have stipulated as follows:

1. That any person who is or will be utilized in the performance of this contract is not prohibited from receiving an award due to a violation of Section 508 of the Clean Water Act or Section 306 of the Clean Air Act.
2. That the contractor agrees to include or cause to be included the requirements of paragraph (1) of this Section X in every subcontract, and further agrees to take such action as the contracting agency may direct as a means of enforcing such requirements.

X. CERTIFICATION REGARDING DEBARMENT, SUSPENSION, INELIGIBILITY AND VOLUNTARY EXCLUSION

This provision is applicable to all Federal-aid construction contracts, design-build contracts, subcontracts, lower-tier subcontracts, purchase orders, lease agreements, consultant contracts or any other covered transaction requiring FHWA approval or that is estimated to cost $25,000 or more – as defined in 2 CFR Parts 180 and 1200.

1. **Instructions for Certification – First Tier Participants:**

a. By signing and submitting this proposal, the prospective first tier participant is providing the certification set out below.

b. The inability of a person to provide the certification set out below will not necessarily result in denial of participation in this covered transaction. The prospective first tier participant shall submit an explanation of why it cannot provide the certification set out below. The certification or explanation will be considered in connection with the department or agency's determination whether to enter into this transaction. However, failure of the prospective first tier participant to furnish a certification or an explanation shall disqualify such a person from participation in this transaction.

c. The certification in this clause is a material representation of fact upon which reliance was placed when the contracting agency determined to enter into this transaction. If it is later determined that the prospective participant knowingly rendered an erroneous certification, in addition to other remedies available to the Federal Government, the contracting agency may terminate this transaction for cause of default.

d. The prospective first tier participant shall provide immediate written notice to the contracting agency to whom this proposal is submitted if any time the prospective first tier participant learns that its certification was erroneous when submitted or has become erroneous by reason of changed circumstances.

e. The terms "covered transaction," "debarred," "suspended," "ineligible," "participant," "person," "principal," and "voluntarily excluded," as used in this clause, are defined in 2 CFR Parts 180 and 1200. "First Tier Covered Transactions" refers to any covered transaction between a grantee or subgrantee of Federal funds and a participant (such as the prime or general contract). "Lower Tier Covered Transactions" refers to any covered transaction under a First Tier Covered Transaction (such as subcontracts). "First Tier Participant" refers to the participant who has entered into a covered transaction with a grantee or subgrantee of Federal funds (such as the prime or general contractor). "Lower Tier Participant" refers any participant who has entered into a covered transaction with a First Tier Participant or other Lower Tier Participants (such as subcontractors and suppliers).

f. The prospective first tier participant agrees by submitting this proposal that, should the proposed covered transaction be entered into, it shall not knowingly enter into any lower tier covered transaction with a person who is debarred, suspended, declared ineligible, or voluntarily excluded from participation in this covered transaction, unless authorized by the department or agency entering into this transaction.

g. The prospective first tier participant further agrees by submitting this proposal that it will include the clause titled "Certification Regarding Debarment, Suspension, Ineligibility and Voluntary Exclusion-Lower Tier Covered Transactions," provided by the department or contracting agency, entering into this covered transaction, without modification, in all lower tier covered transactions and in all solicitations for lower tier covered transactions exceeding the $25,000 threshold.

h. A participant in a covered transaction may rely upon a certification of a prospective participant in a lower tier covered transaction that is not debarred, suspended, ineligible, or voluntarily excluded from the covered transaction, unless it knows that the certification is erroneous. A participant is responsible for ensuring that its principals are not suspended, debarred, or otherwise ineligible to participate in covered transactions. To verify the eligibility of its principals, as well as the eligibility of any lower tier prospective participants, each participant may, but is not required to, check the Excluded Parties List System website (https://www.epls.gov/), which is compiled by the General Services Administration.

i. Nothing contained in the foregoing shall be construed to require the establishment of a system of records in order to render in good faith the certification required by this clause. The knowledge and information of the prospective participant is not required to exceed that which is normally possessed by a prudent person in the ordinary course of business dealings.

j. Except for transactions authorized under paragraph (f) of these instructions, if a participant in a covered transaction knowingly enters into a lower tier covered transaction with a person who is suspended, debarred, ineligible, or voluntarily excluded from participation in this transaction, in addition to other remedies available to the Federal Government, the department or agency may terminate this transaction for cause or default.

* * * * *

2. Certification Regarding Debarment, Suspension, Ineligibility and Voluntary Exclusion – First Tier Participants:

a. The prospective first tier participant certifies to the best of its knowledge and belief, that it and its principals:

(1) Are not presently debarred, suspended, proposed for debarment, declared ineligible, or voluntarily excluded from participating in covered transactions by any Federal department or agency;

(2) Have not within a three-year period preceding this proposal been convicted of or had a civil judgment rendered against them for commission of fraud or a criminal offense in connection with obtaining, attempting to obtain, or performing a public (Federal, State or local) transaction or contract under a public transaction; violation of Federal or State antitrust statutes or commission of embezzlement, theft, forgery, bribery, falsification or destruction of records, making false statements, or receiving stolen property;

(3) Are not presently indicted for or otherwise criminally or civilly charged by a governmental entity (Federal, State or local) with commission of any of the offenses enumerated in paragraph (a)(2) of this certification; and

(4) Have not within a three-year period preceding this application/proposal had one or more public transactions (Federal, State or local) terminated for cause or default.

b. Where the prospective participant is unable to certify to any of the statements in this certification, such prospective participant shall attach an explanation to this proposal.

2. **Instructions for Certification - Lower Tier Participants:**

(Applicable to all subcontracts, purchase orders and other lower tier transactions requiring prior FHWA approval or estimated to cost $25,000 or more - 2 CFR Parts 180 and 1200)

a. By signing and submitting this proposal, the prospective lower tier is providing the certification set out below.

b. The certification in this clause is a material representation of fact upon which reliance was placed when this transaction was entered into. If it is later determined that the prospective lower tier participant knowingly rendered an erroneous certification, in addition to other remedies available to the Federal Government, the department, or agency with which this transaction originated may pursue available remedies, including suspension and/or debarment.

c. The prospective lower tier participant shall provide immediate written notice to the person to which this proposal is submitted if at any time the prospective lower tier participant learns that its certification was erroneous by reason of changed circumstances.

d. The terms "covered transaction," "debarred," "suspended," "ineligible," "participant," "person," "principal," and "voluntarily excluded," as used in this clause, are defined in 2 CFR Parts 180 and 1200. You may contact the person to which this proposal is submitted for assistance in obtaining a copy of those regulations. "First Tier Covered Transactions" refers to any covered transaction between a grantee or subgrantee of Federal funds and a participant (such as the prime or general contract). "Lower Tier Covered Transactions" refers to any covered transaction under a First Tier Covered Transaction (such as subcontracts). "First Tier Participant" refers to the participant who has entered into a covered transaction with a grantee or subgrantee of Federal funds (such as the prime or general contractor). "Lower Tier Participant" refers any participant who has entered into a covered transaction with a First Tier Participant or other Lower Tier Participants (such as subcontractors and suppliers).

e. The prospective lower tier participant agrees by submitting this proposal that, should the proposed covered transaction be entered into, it shall not knowingly enter into any lower tier covered transaction with a person who is debarred, suspended, declared ineligible, or voluntarily excluded from participation in this covered transaction, unless authorized by the department or agency with which this transaction originated.

f. The prospective lower tier participant further agrees by submitting this proposal that it will include this clause titled "Certification Regarding Debarment, Suspension, Ineligibility and Voluntary Exclusion-Lower Tier Covered Transaction," without modification, in all lower tier covered transactions and in all solicitations for lower tier covered transactions exceeding the $25,000 threshold.

g. A participant in a covered transaction may rely upon a certification of a prospective participant in a lower tier covered transaction that is not debarred, suspended, ineligible, or voluntarily excluded from the covered transaction, unless it knows that the certification is erroneous. A participant is responsible for ensuring that its principals are not suspended, debarred, or otherwise ineligible to participate in covered transactions. To verify the eligibility of its principals, as well as the eligibility of any lower tier prospective participants, each participant may, but is not required to, check the Excluded Parties List System website (https://www.epls.gov/), which is compiled by the General Services Administration.

h. Nothing contained in the foregoing shall be construed to require establishment of a system of records in order to render in good faith the certification required by this clause. The knowledge and information of participant is not required to exceed that which is normally possessed by a prudent person in the ordinary course of business dealings.

i. Except for transactions authorized under paragraph e of these instructions, if a participant in a covered transaction knowingly enters into a lower tier covered transaction with a person who is suspended, debarred, ineligible, or voluntarily excluded from participation in this transaction, in addition to other remedies available to the Federal Government, the

department or agency with which this transaction originated may pursue available remedies, including suspension and/or debarment.

* * * * *

Certification Regarding Debarment, Suspension, Ineligibility and Voluntary Exclusion--Lower Tier Participants:

1. The prospective lower tier participant certifies, by submission of this proposal, that neither it nor its principals is presently debarred, suspended, proposed for debarment, declared ineligible, or voluntarily excluded from participating in covered transactions by any Federal department or agency.

2. Where the prospective lower tier participant is unable to certify to any of the statements in this certification, such prospective participant shall attach an explanation to this proposal.

---

* * * * *

XI. CERTIFICATION REGARDING USE OF CONTRACT FUNDS FOR LOBBYING

This provision is applicable to all Federal-aid construction contracts and to all related subcontracts which exceed $100,000 (49 CFR 20).

1. The prospective participant certifies, by signing and submitting this bid or proposal, to the best of his or her knowledge and belief, that:

a. No Federal appropriated funds have been paid or will be paid, by or on behalf of the undersigned, to any person for influencing or attempting to influence an officer or employee of any Federal agency, a Member of Congress, an officer or employee of Congress, or an employee of a Member of Congress in connection with the awarding of any Federal contract, the making of any Federal grant, the making of any Federal loan, the entering into of any cooperative agreement, and the extension, continuation, renewal, amendment, or modification of any Federal contract, grant, loan, or cooperative agreement.

b. If any funds other than Federal appropriated funds have been paid or will be paid to any person for influencing or attempting to influence an officer or employee of any Federal agency, a Member of Congress, an officer or employee of Congress, or an employee of a Member of Congress in connection with this Federal contract, grant, loan, or cooperative agreement, the undersigned shall complete and submit Standard Form-LLL, "Disclosure Form to Report Lobbying," in accordance with its instructions.

2. This certification is a material representation of fact upon which reliance was placed when this transaction was made or entered into. Submission of this certification is a prerequisite for making or entering into this transaction imposed by 31 U.S.C. 1352. Any person who fails to file the required certification shall be subject to a civil penalty of not less than $10,000 and not more than $100,000 for each such failure.

3. The prospective participant also agrees by submitting its bid or proposal that the participant shall require that the language of this certification be included in all lower tier subcontracts, which exceed $100,000 and that all such recipients shall certify and disclose accordingly.

ATTACHMENT A - EMPLOYMENT AND MATERIALS PREFERENCE FOR APPALACHIAN DEVELOPMENT HIGHWAY SYSTEM OR APPALACHIAN LOCAL ACCESS ROAD CONTRACTS

This provision is applicable to all Federal-aid projects funded under the Appalachian Regional Development Act of 1965.

1. During the performance of this contract, the contractor undertaking to do work which is, or reasonably may be, done as on-site work, shall give preference to qualified persons who regularly reside in the labor area as designated by the DOL wherein the contract work is situated, or the subregion, or the Appalachian counties of the State wherein the contract work is situated, except:

a. To the extent that qualified persons regularly residing in the area are not available.

b. For the reasonable needs of the contractor to employ supervisory or specially experienced personnel necessary to assure an efficient execution of the contract work.

c. For the obligation of the contractor to offer employment to present or former employees as the result of a lawful collective bargaining contract, provided that the number of nonresident persons employed under this subparagraph (1c) shall not exceed 20 percent of the total number of employees employed by the contractor on the contract work, except as provided in subparagraph (4) below.

2. The contractor shall place a job order with the State Employment Service indicating (a) the classifications of the laborers, mechanics and other employees required to perform the contract work, (b) the number of employees required in each classification, (c) the date on which the participant estimates such employees will be required, and (d) any other pertinent information required by the State Employment Service to complete the job order form. The job order may be placed with the State Employment Service in writing or by telephone. If during the course of the contract work, the information submitted by the contractor in the original job order is substantially modified, the participant shall promptly notify the State Employment Service.

3. The contractor shall give full consideration to all qualified job applicants referred to him by the State Employment Service. The contractor is not required to grant employment to any job applicants who, in his opinion, are not qualified to perform the classification of work required.

4. If, within one week following the placing of a job order by the contractor with the State Employment Service, the State Employment Service is unable to refer any qualified job applicants to the contractor, or less than the number requested, the State Employment Service will forward a certificate to the contractor indicating the unavailability of applicants. Such certificate shall be made a part of the contractor's permanent project records. Upon receipt of this certificate, the contractor may employ persons who do not normally reside in the labor area to fill positions covered by the certificate, notwithstanding the provisions of subparagraph (1c) above.

5. The provisions of 23 CFR 633.207(e) allow the contracting agency to provide a contractual preference for the use of mineral resource materials native to the Appalachian region.

6. The contractor shall include the provisions of Sections 1 through 4 of this Attachment A in every subcontract for work which is, or reasonably may be, done as on-site work.

Approved by OMB No. 0348-0046

DISCLOSURE OF LOBBYING ACTIVITIES

Complete this form to disclose lobbying activities pursuant to 31 U.S.C. 1352
(See Reverse for public burden disclosure.)

1. Type of Federal Action: ☐ a. contract b. grant c. cooperative agreement d. loan e. loan guarantee f. loan insurance	**2. Status of Federal Action:** ☐ a. bid/offer/application b. initial award c. post-award	**3. Report Type:** ☐ a. initial filing b. material change **For Material Change Only:** year _____ quarter _____ date of last report _____
4. Name and Address of Reporting Entity: ☐ Prime ☐ Subawardee Tier _____, *if known:* **Congressional District,** *If known:*		**5. If Reporting Entity in No. 4 is a Subawardee, Enter Name and Address of Prime:** **Congressional District,** *If known:*
6. Federal Department/Agency:		**7. Federal Program Name/Description:** CFDA Number, *if applicable:*
8. Federal Action Number, *If known:*		**9. Award Amount,** *If known:* $
10. a. Name and Address of Lobbying Registrant *(If individual, last name, first name, MI):*		**b. Individuals Performing Services** *(Including address if different from No. 10a)* *(last name, first name, MI):*
11. Information requested through this form is authorized by title 31 U.S.C. section 1352. This disclosure of lobbying activities is a material representation of fact upon which reliance was placed by the tier above when this transaction was made or entered into. This disclosure is required pursuant to 31 U.S.C. 1352. This information will be reported to the Congress semi-annually and will be available for public inspection. Any person who fails to file the required disclosure shall be subject to a civil penalty of not less that $10,000 and not more than $100,000 for each such failure.		Signature: _____ Print Name: _____ Title: _____ Telephone No.: _____ Date: _____
Federal Use Only:		Authorized for Local Reproduction Standard Form LLL (Rev. 7-97)

INSTRUCTIONS FOR COMPLETION OF SF-LLL, DISCLOSURE OF LOBBYING ACTIVITIES

This disclosure form shall be completed by the reporting entity, whether subawardee or prime Federal recipient, at the initiation or receipt of a covered Federal action, or a material change to a previous filing pursuant to title 31 U.S.C. section 1352. The filing of a form is required for each payment or agreement to make payment to any lobbying entity for influencing or attempting to influence an officer or employee of any agency, a Member of Congress, an officer or employee of Congress, or an employee of a Member of Congress in connection with a covered Federal action. Complete all items that apply for both the initial filing and material change report. Refer to the implementing guidance published by the Office of Management and Budget for additional information.

1. Identify the type of covered Federal action for which lobbying activity is and/or has been secured to influence the outcome of a covered Federal action.

2. Identify the status of the covered Federal action.

3. Identify the appropriate classification of this report. If this a followup report caused by a material change to the information previously reported, enter the year and quarter in which the change occurred, Enter the date of the last previously submitted report by this reporting entity for this covered Federal action.

4. Enter the full name, address, city, State and zip code of the reporting entity. Include Congressional District, if known. Check the appropriate classification of the reporting entity that designates if it is, or expects to be a prime or subaward receipt. Identify the tier of the subawardee, e.g., the first subawardee of the prime is the 1st tier. Subawards include but are not limited to subcontracts, subgrants and contract awards under grants.

5. If the organization filing the report in item 4 checks :Subawardee," then enter the full name, address, city, State and zip code of the prime Federal recipient. Include Congressional District, if known.

6. Enter the name of the Federal agency making the award or loan commitment. Include at least one organizational level below agency name, if known. For example, Department of Transportation, United States Coast Guard.

7. Enter the Federal program name or description for the covered Federal action (Item 1). If known, enter the full Catalog of Federal Domestic Assistance (CFDA) number for grants, cooperative agreements, loans and loan commitments.

8. Enter the most appropriate Federal identifying number available for the Federal action identified in Item 1 (e.g., Request for Proposal (RFP) number; Invitation for bid (IFB) number; grant announcement number; the contract, grant, or loan award number; the application/proposal control number assigned by the Federal agency). Include prefixes, e.g. "RFP-DE-90-001."

9. For a covered Federal action where there has been an award or loan commitment by the Federal agency, enter the Federal amount of the award/loan commitment for the prime entity identified in Item 4 or 5.

10. (a) Enter the full name, address, city, State and zip code of the lobbying registrant under the Lobbying Disclosure Act of 1995 engaged by the reporting entity identified in Item 4 to influence the covered Federal action.

    (b) Enter the full names of the individual(s) performing services, and include full address if different from 10 (a). Enter Last Name, First Name and Middle Initial (MI).

11. Certifying official shall sign and date the form, print his/her name, title and telephone number.

According to the Paperwork Reduction Act, as amended, no persons are required to respond to a collection of information unless it displays a valid OMB Control Number. The valid OMB control number for this information collection is OMB No. 0348-0046. Public reporting burden for this collection of information is estimated to average 10 minutes per response, including time for reviewing instructions, searching existing data sources, gathering and maintaining the data needed, and completing and reviewing the collection of information. Send comments regarding the burden estimate or any other aspect of this collection of information, including suggestions for reducing this burden, to the Office of Management and Budget, Paperwork Reduction Project (0348-0046), Washington, DC 20503.

04/01/09 SA

SSD: 06/28/04

ALL FA PROJECTS

SPECIAL ATTENTION

DISADVANTAGED BUSINESS ENTERPRISE (DBE) DIRECTORY

The current New Hampshire Unified Disadvantaged Business Enterprise (DBE) Directory is available on the NHDOT website at http://www.nh.gov/dot/business/contractors.htm. If you have questions or do not have access to the Internet, the directory may be obtained from DBE Coordinator, located at 7 Hazen Drive, Concord, NH 03302, Tel: (603) 271-6612.

SPECIAL ATTENTION

Disadvantaged Business Enterprise (DBE)

Disadvantaged Business Enterprise (DBE) Policy. It shall be the policy of the New Hampshire Department of Transportation (NHDOT) to ensure nondiscriminatory opportunity for Disadvantaged Business Enterprises (DBE's) to participate in the performance of all contracts and subcontracts financed with Federal funds as specified by the regulations of the United States Department of Transportation (USDOT), Federal Highway Administration and as set forth below.

1. **Policy.** It is the policy of the United States Department of Transportation to ensure nondiscriminatory opportunity for disadvantaged business enterprises, as defined in 49 Code of Federal Regulation (CFR) Part 26, to participate in the performance of contracts and subcontracts financed in whole or in part with Federal funds. Consequently, the DBE requirements of 49 CFR Part 26 applies to this contract.

2. **Disadvantaged Business Enterprise (DBE) Obligation.** The State and its Contractor agree to ensure nondiscriminatory opportunity for disadvantaged business enterprises, as defined in 49 CFR Part 26, to participate in the performance of contracts and subcontracts financed in whole or in part with Federal funds. **Prime Contractors and subcontractors who further sublet must include this assurance in every subcontract:** *The Contractor, sub recipient or subcontractor shall not discriminate on the basis of race, color, national origin, or sex in the award and performance of this contract. The Contractor shall carry out applicable requirements of 49 CFR Part 26 in the award and administration of USDOT-assisted contracts. Failure by any contractor to carry out these requirements is a material breach of this contract, which may result in the termination of this Contract or such other remedy, as the NHDOT deems appropriate.*

3. **Sanctions of Non-Compliance**. The Contractor is hereby advised that failure of the Contractor, or any Subcontractor performing work under this Contract, to carry out the requirements set forth in paragraphs 1 and 2 above shall constitute a breach of contract and, after notification of the United States Department of Transportation, may result in termination of this Contract or such remedy as the State deems appropriate.

Overall Statewide DBE Goals. The NHDOT currently employs a race/gender neutral DBE policy to attain its overall statewide DBE goals. This means that unless otherwise stated in the Contract, the NHDOT relies on the voluntary cooperation of all contractors to utilize DBE's on every project, sufficient to meet or exceed the current statewide DBE goal. Although the majority of statewide DBE goals are currently voluntary, failure of the NHDOT to meet or exceed the overall statewide DBE goal as required by the Federal Highway Administration (FHWA), could necessitate placement of mandatory DBE participation requirements on all future statewide projects.

Disadvantaged Business Enterprise (DBE) Program Goals. The New Hampshire Department of Transportation is required to set an overall DBE goal for participation in all transportation related Federal-aid projects. The goal is determined following guidelines set forth in 49 CFR 26.45, and based on the availability of ready, willing and able DBE's who submitted bids for transportation related projects, compared as a percentage of all available contractors who submitted bids for transportation related projects during the same time period. The DBE goal may be adjusted to take into account other factors impacting DBE utilization, in an effort to narrowly tailor the overall DBE goal. The detailed goal setting methodology and current overall DBE goal may be viewed on the NHDOT website at www.nh.gov/dot.

Disadvantaged Business Enterprise (DBE) Definition. A DBE is defined as a business that is owned and controlled by one or more socially and economically disadvantaged person(s). For the purpose of this definition:

A. "Socially and economically disadvantaged person" means an individual who is a citizen or lawful permanent resident of the United States and who is a Woman, Black, Hispanic, Portuguese, Native American, Asian American, or a member of another group, or an individual found to be disadvantaged by an individual determination of social disadvantage as described in 49 CFR 26 appendix E, determinations of social and economic disadvantage.

B. "Owned and controlled" means a business which is:
   (1) A sole proprietorship legitimately owned and controlled by an individual who is a disadvantaged person.
   (2) A partnership, joint venture or limited liability Company in which at least 51% of the beneficial ownership interests is legitimately held by a disadvantaged person(s).
   (3) A corporation or other entity in which at least 51% of the voting interest and 51% of the beneficial ownership interests are legitimately held by a disadvantaged person(s).

The disadvantaged group owner(s) or stockholder(s) must possess control over management, interest in capital, and interest in earnings commensurate with the percentage of ownership. Disadvantaged participation in a joint venture must also be based on the sharing of real economic interest and must include proportionate control over management, capital, and earnings, as above. If the disadvantaged group ownership interests are real, substantial and continuing and not created solely to meet the requirements of this program, a firm is considered a bona fide DBE.

Certified DBE Directory. The current New Hampshire Unified Disadvantaged Business Enterprise (DBE) Directory is available online at www.nh.gov/dot. This directory contains all currently certified DBE's available for work in New Hampshire, and is updated monthly. Only firm's listed in this directory are eligible for DBE credit on NH Federal-aid projects. If you have questions about DBE certification, or do not have access to the Internet, please call the DBE Coordinator at (603) 271-6612 for assistance.

Counting DBE Participation For Project Goals. In order for payments made to DBE contractors to be counted toward DBE goals, the DBE contractors must perform a commercially useful function (CUF). The DBE must be responsible for execution of the work of the contract and must carry out its responsibilities by actually performing, managing, and supervising the work involved, consistent with standard industry practices. This means that:

A. The DBE must also be responsible for ordering its own materials and supplies, determining quantity and quality, negotiating price, installing (where applicable) and paying for the material itself;
B. The DBE must perform work commensurate with the amount of its contract;
C. The DBE's contribution cannot be that of an extra participant or a conduit through which funds are passed in order to obtain the appearance of DBE participation;
D. The DBE must exercise responsibility for at least fifty percent of the total cost of its contract with its own work force;
E. None of the DBE's work can be subcontracted back to the Prime Contractor, nor can the DBE employ the prime's, or other subcontractor's supervisors currently working on the project;
F. The DBE's labor force must be separate and apart form that of the Prime Contractor or other subcontractors on the project. Transferring crews between primes, subcontractors, and DBE contractors is not acceptable;

G. The DBE owner must hold a Public Works license and any other professional or craft licenses required for the type of work he/she performs on the project;
H. The DBE may rent or lease, at competitive rates, equipment needed on the project from customary leasing sources or from other subcontractors on the project.

Allowable credit for payments made to DBEs for work performed. A contractor may take credit for payments made to a certified DBE that satisfies (CUF) requirements at the following rate.

A. A DBE Prime Contractor; count 100% of the value of work performed by own forces, equipment and materials count towards DBE goals.
B. An approved DBE subcontractor; count 100% of the value of work performed by the DBE's own forces, equipment and materials, excluding the following:
   - The cost of materials/supplies purchased from a non-DBE Prime Contractor.
   - The value of work provided by non-DBE lower tier subcontractors, including non-DBE trucking to deliver asphalt to a DBE contractor.
C. A DBE owner-operator of construction equipment; count 100% of expenditures committed.
D. A DBE manufacturer; count 100% of expenditures committed. The manufacturer must be a firm that operates or maintains a factory or establishment that produces on the premises the materials or supplies obtained by the Prime Contractor.
E. A regular DBE dealer/supplier; count 60% of expenditures committed.
   A regular dealer/supplier is defined as a firm that owns, operates, or maintains a store, warehouse or other establishment, in which the materials or supplies required for the performance of the contract are bought, kept in stock, and regularly sold or leased to the public in the usual course of business. A person may be a dealer in such bulk items as petroleum products, steel, cement, gravel, stone or asphalt without owning, operating or maintaining a place of business, if the person both owns and operates distribution equipment for the products, by the means of a long term agreement, and not by a contract by contract basis.
F. A DBE Broker; count for DBE credit only the fees or commissions charged for assistance in the procurement, and, fees and transportation charges for the delivery of materials or supplies required at the job site, but not the cost of materials procured. A broker is defined as any person(s) or firm who arranges or expedites transactions for materials or supplies, and does not take physical possession of the materials or supplies at their place of business for resale.
G. A DBE renter of construction equipment to a contractor; count 20% of expenditures committed, with or without operator.
H. A bona fide DBE service provider; count 100% of reasonable fees or commissions.
   Eligible services include professional, technical, consultant, or managerial, services and assistance in the procurement of essential personnel, facilities, equipment, materials or supplies required for the performance of the contract. Eligible services also include agencies providing bonding and insurance specifically required for the performance of the contract.
I. A trucking, hauling or delivery operation, count 100% of payments when trucks are owned, operated, licensed and insured by the DBE and used on the contract and, if applicable, includes the cost of the materials and supplies. 100% of payments when the DBE leases trucks from another DBE firm including an owner-operator. 100% of reasonable fees, or commissions, the DBE receives as a result of a lease arrangement for trucks from a non-DBE, including an owner-operator.
J. Any combination of the above.

Reporting Requirements for Payments Made To DBE's: On all Federal-aid projects, the Prime Contractor is required to report payments made to DBE's during the life of the contract, on a quarterly basis, for the periods covering January 1st–March 31st, April 1st-June 30th, July 1st-September 30th and October 1st-December 31st, The NHDOT will provide the Prime Contractor with a quarterly DBE

payments report, detailing all DBE's subcontracted by the Prime Contractor, per project. The Prime Contractor shall report any payments made to DBE's during the requested reporting period. This documentation shall be submitted to the Office of Federal Compliance within the time period stated on the NHDOT quarterly request. Failure of the Prime Contractor to submit this information may result in the Department withholding progress payments.

Removal of Approved DBE From Transportation Related Project: Contractors may not terminate for convenience, any approved DBE subcontractor and perform the work with their own forces, without prior written consent from the NHDOT.

MUNICIPAL PROJECTS ONLY: Timely submission of invoices to Municipalities: Prime Contractors must submit all invoices received for satisfactorily completed work, from any subcontractor/lower-tier subcontractor/material supplier, to Municipalities for payment within 30 days of receipt.

ALL FA PROJECTS (STEEL & IRON PRODUCTS)

SPECIAL ATTENTION

BUY AMERICA

In accordance with the **BUY AMERICA** requirements of the Federal regulations, all manufacturing processes for steel and iron materials furnished for permanent incorporation into the work on this project shall occur in the United States. The only exception to this requirement is the production of pig iron and the processing, pelletizing and reduction of iron ore, which may occur in another country. Other than these exceptions, all melting, rolling, extruding, machining, bending, grinding, drilling, coating, etc. must occur in the United States.

Products of steel include, but are not limited to, such products as structural steel, piles, reinforcing steel, structural plate, steel culverts, guardrail and steel supports for signs, signals and luminaires. Products of iron include, but are not limited to, such products as cast iron frames and grates. Coatings include, but are not limited to, the applications of epoxy, galvanizing and paint. The coating material is not subject to this clause, only the application process.

A Certificate of Compliance, conforming to the requirements of Section 106.04, shall be furnished for steel and iron materials. Records to be maintained by the contractor for this certification shall include a signed mill test report and a signed certification by each supplier, distributor, fabricator, and manufacturer that has handled the steel or iron product affirming that every process, including the application of a coating, performed on the steel or iron product has been carried out in the United States of America, except as allowed by this Special Attention. The lack of these certifications will be justification for rejection of the steel or iron product.

The requirements of said law and regulations do not prevent a minimal use of foreign steel and iron materials if the cost of such materials used does not exceed one-tenth of one percent (0.1%) of the total contract price or $2,500.00, whichever is greater.

Upon completion of the project, the Contractor shall certify in writing as to compliance with this Special Attention and also provide the total project delivered cost of all foreign steel and/or iron permanently incorporated into the project. The form for this certification is entitled "Buy America Certificate of Compliance" and can be found at www.NHDOT.com.

December 24, 1998
Supersedes Spec. Attn. dated 3/29/88 & 12/5/90

FHWA Projects

SPECIAL ATTENTION

CONTRACT AFFIDAVIT - CERTIFICATION REGARDING DEBARMENT SUSPENSION

The separate form entitled, CONTRACT AFFIDAVIT (As Required by Section 112(c) of Title 23 USC) has been deleted from this proposal.

Bidders are advised that the last page of the bidding proposal has been revised to include the same reference, **IN BOLD PRINT**, relative to the non-collusion statement included on the discontinued form.

XXXXXXXXXXXXXX

The Contractor is advised that 49 CFR 29.510, Appendix A, requires that the Contractor, including all principals, certify that they are not currently under debarment or suspension or have not been under debarment or suspension within the past three years. (For certification instructions see next page).

The certification has been added, **IN BOLD PRINT,** onto the next to the last page of the bidding proposal.

The Contractor is further advised that Appendix B of 49 CFR 29.510 regarding certification of lower tier transactions has been added to Form FHWA-1273.

Appendix A - Certification regarding Debarment, Suspension, and other Responsibility Matters - Primary Covered Transactions.

Instruction for Certification

1. By signing and submitting this proposal, the prospective primary participant is providing the certification set out below.

2. The inability of a person to provide the certification required below will not necessarily result in denial of participation in this covered transaction. The prospective participant shall submit an explanation of why it cannot provide the certification set out below. The certification or explanation will be considered in connection with the department or agency's determination whether to enter into this transaction. However, failure of the prospective primary participant to furnish a certification or an explanation shall disqualify such person from participation in this transaction.

3. The certification in this clause is a material representation of fact upon which reliance was placed when the department or agency determined to enter into this transaction. If it is later determined that the prospective primary participant knowingly rendered an erroneous certification, in addition to other remedies available to the Federal Government, the department or agency may terminate this transaction for cause of default.

4. The prospective primary participant shall provide immediate written notice to the department or agency to whom this proposal is submitted if at any time the prospective primary participant learns that its certification was erroneous when submitted or has become erroneous by reason of changed circumstances.

5. The terms "covered transaction," "debarred," "suspended," "ineligible," "lower tier covered transaction," "participant," "person," "primary covered transaction," "principal," "proposal," and "voluntarily excluded," as used in this clause, have the meanings set out in the Definitions and Coverage sections of the rules implementing Executive Order 12549. You may contact the department or agency to which this proposal is being submitted for assistance in obtaining a copy of these regulations.

6. The prospective primary participant agrees by submitting this proposal that, should the proposed covered transaction be entered into, it shall not knowingly enter into any lower tier covered transaction with a person who is debarred, suspended, declared ineligible, or voluntarily excluded from participation in this covered transaction, unless authorized by the department or agency entering into this transaction.

7. The prospective primary participant further agrees by submitting this proposal that it will include the clause titled "Certification" Regarding Debarment, Suspension, Ineligibility and Voluntary Exclusion-Lower Tier Covered Transaction," provided by the department or agency entering into this covered transaction, without modification, in all lower tier covered transactions and in all solicitations for lower tier covered transactions.

8. A participant in a covered transaction may rely upon a certification of a prospective participant in a lower tier covered transaction that is not debarred, suspended, ineligible, or voluntarily excluded from the covered transaction, unless it knows that the certification is erroneous. A participant may decide the method and frequency by which it determines the eligibility of its principals. Each participant may, but is not required to, check the Nonprocurement List.

9. Nothing contained in the foregoing shall be construed to require establishment of a system of records in order to render in good faith the certification required by this clause. The knowledge and information of a participant is not required to exceed that which is normally possessed by a prudent person in the ordinary course of business dealings.

10. Except for transactions authorized under paragraph 6 of these instructions, if a participant in a covered transaction knowingly enters into a lower tier covered transaction with a person who is suspended, debarred, ineligible, or voluntarily excluded from participation in this transaction, in addition to other remedies available to the Federal Government, the department or agency may terminate this transaction for cause or default.

1/2001
Supersedes 3/90
ALL FA PROJECTS

SPECIAL ATTENTION

LOBBYING

UNITED STATES DEPARTMENT OF TRANSPORTATION
FEDERAL HIGHWAY ADMINISTRATION

SUBJECT: LIMITATION ON USE OF GRANT OR CONTRACT FUNDS FOR LOBBYING

The lobbying restrictions were established by Section 319 of Public Law 101-121 (Department of the Interior and Related Agencies Appropriations Act for Fiscal Year 1990).

The law prohibits Federal funds from being expended by the recipient or any lower tier subrecipients of a Federal contract, grant, loan, or cooperative agreement to pay any person for influencing or attempting to influence a Federal agency or Congress in connection with the awarding of any Federal contract, the making of any Federal grant or loan, or the entering into of any cooperative agreement. The extension, continuation, renewal, amendment or modification of any Federal contract, grant, loan, or cooperative agreement is also covered.

Federal-aid contractors, and consultants, as well as lower tier subcontractors and subconsultants are also subject to he lobbying prohibition. To assure compliance, a certification provision is included in all Federal-aid construction solicitations and contracts, and consultant agreements exceeding $100,000 in Federal funds.

The Contractor shall be aware that by signing and submitting this proposal, he or she is attesting to the requirements of the certification provisions.

During the period of performance of a grant or contract, recipients and subrecipients must file disclosure form (Standard Form LLL) at the end of each calendar year quarter in which there occurs any event that requires disclosure or that materially affects the accuracy of the information contained in any previously filed disclosure form.

Lower tier certifications should be maintained by the next tier above (i.e., prime contractors will keep the subcontractors' certification on file, etc.). Copies of Standard Form LLL will be included in the subcontract package for distribution to successful bidders.

SPECIAL ATTENTION

SUMMARY OF REQUIREMENTS FOR FEDERAL-AID PROJECTS

1. **Subletting On Federal-aid Contracts.**

   a. On Federal-Aid projects, the following documents are required to be incorporated in and made a part of every subcontract agreement (including lower-tier subcontract agreements):

      - NHDOT Policy on Subcontracting
      - Required Contract Provisions (FHWA-1273)
      - Disadvantaged Business Enterprise (DBE) Program Requirements (Standard Spec 103.06)
      - *41 CFR 60-4 Affirmative Action Requirements
      - **U.S. Department of Labor (USDOL) wage rates entitled "GENERAL WAGE DECISION" (as contained in the contract)

      *Applicable only to contracts or subcontracts in excess of $10,000
      **Does not apply to companies performing non-Davis Bacon type work (testing, monitoring, and inspection services).

   b. Subcontractor Approvals for Companies Who Perform Testing, Monitoring, Inspection Services

      1) Companies and/or independent contractors performing testing, monitoring, or inspection, such as ground penetrating radar, erosion control monitoring, video inspection, SWPPP, environmental testing/monitoring or vibration monitoring, for example, require subcontractor approval (NHDOT must verify Workers Compensation (WC) Insurance coverage).

      2) The following subcontractor approval documentation is required:
         - OFC Form 15 (15a for a State managed project and 15b for Local Public Agency (LPA) projects), Transmittal
         - OFC Form 26, Work Certificate
         - Proof of Workers Compensation Insurance coverage (if not already on file)

   c. Contractors will not be approved/authorized to work until the Department's Annual Assurances requirements have been fulfilled.

   d. RSA 228:4-b shall apply to any work done by an individual contractor on any state transportation project.

   e. Prime Contractors shall submit consent to sublet packages to the NHDOT at least 5 working days prior to said subcontractor (or lower-tier subcontractor)

performing work on site. On LPA projects, the Prime Contractor shall also provide a courtesy copy to the town or the town's consultant, if applicable.

f. LPA Projects Only: NHDOT Office of Federal Compliance (OFC) is the sole approval authority for all LPA construction projects. Consents to sublet shall be submitted directly to the OFC.

2. **FHWA Form 1273, Required Contract Provisions.**

   a. The Prime Contractor shall insert in each subcontract all the stipulations contained in the Required Contract Provisions. Primes shall further require their inclusion in any lower-tier subcontract or purchase order that may in-turn be made. The Required Contract Provisions shall not be incorporated by reference in any case.

   b. In accordance with Section I, Paragraph 1, the Prime Contractor shall be responsible for compliance by any subcontractor, lower-tier subcontractor or service provider. This shall include any unpaid wages found to be owed that is not paid by a subcontractor or lower-tier subcontractor.

   c. In accordance with Section I, Paragraph 3, "A breach of any of the stipulations contained in these Required Contract Provisions may be sufficient grounds for withholding of progress payments, withholding of final payment, termination of the contact, suspension/debarment or any other action determined to be appropriate by the contracting agency and FHWA."

3. **Submission of Payrolls**: Payrolls, as required by FHWA Form 1273, shall be submitted electronically (email) as a pdf document to the NHDOT Contract Administrator, named in the following format: Contractor's name (abbreviated is acceptable) followed by the "week ending" date (year/month/day). The Contractor's and each Sub-contractor's payroll shall be submitted as separate, individual files. Example: PrimeContr – 2014-12-03; SubcontraA – 2014-12-03; SubcontraB – 2014-12-03.

4. **Sign-In Sheets.** Use of daily sign-in sheets is **mandatory** on all LPA projects. Every worker must sign in, on a daily basis, prior to performing work on site. The OFC Form 20 shall be used for this purpose. The Prime Contractor is responsible to ensure sign-in sheet requirements are met and are turned in to the Contract Administrator on a daily basis. Contract Administrators shall review and initial sign-in sheets daily cross matching what employees have indicated for their work classification and what employers are indicating on certified payroll reports, and verifying employers of workers signing in have been approved to work by the NHDOT. Sign-in sheets shall be co-located with certified payrolls and filed in a 3-ring binder, newest sign-in sheets on top. Sign-in sheets are an inspection item. Note: Use of sign-in sheets may also be directed by the OFC on State managed projects for any contractor who does not accurately report all workers performing work on site on their payrolls.

5. **Requesting Work Classifications, Classifying Workers, and/or Payment of Wages**.

   a. The Prime Contractor is required to submit an additional request to the NHDOT for any classification of labor/equipment that they or their subcontractors shall be utilizing under the contract that is not contained in the proposal's Federal General Decision.

   b. Unless otherwise instructed by the OFC, a SF 1444 shall be used for this purpose.

   c. Requests must be submitted to the NHDOT prior to any work being performed in the classification(s).

   d. Contractors who do not receive a USDOL conformance decision from the OFC within 45 days of submission should follow-up with the OFC.

   e. Once a decision is received from the USDOL, the OFC will, in-turn, notify the Prime Contractor. In cases when the USDOL stipulates a higher rate of pay than the one proposed by a contractor, and the Contractor elects not to submit an appeal, restitution, if due, shall be paid to employees within 10 calendar days of being notified by the OFC. Restitution requirements of the NHDOT shall apply.

   f. Appeals shall be filed with the USDOL within 30 calendar days and a courtesy copy forwarded to the OFC at the same time. Restitution, if applicable, does not need to be paid during the time the appeal is under review by the USDOL.

   g. Contractors shall immediately inform the OFC whenever appeal decisions (including reconsideration requests) are received from the USDOL.

   h. In those cases when a contractor indicates to the OFC he/she plans to appeal the USDOL decision but fails to provide the OFC proof of submission within 30 calendar days, the contractor shall comply with the original USDOL decision. The OFC will subsequently notify the Contractor that proof of an appeal was not received within 30 days and restitution, if applicable, must be paid to workers within 10 calendar days. Contractors who fail to provide restitution will be deemed "in non-compliance."

   i. Time Sheets: Every contractor shall create and maintain time sheets for every worker performing work on the project. This includes salaried employees who perform work in a classification, either intermittingly or full time. Time sheets shall record all work performed during the work week, both Federal and non-Federal, shop time, travel time considered work time, including any time considered "hours worked" as described under the Fair Labor Standards Act, Part 785. When requested, Contractors shall provide copies of time sheets to the OFC in support of certified payroll report information being provided. Time sheets, payroll records, and other basic records relating thereto shall be maintained by the contractor during the course of the work and preserved for a period of three years thereafter for all laborers and mechanics working at the site of work.

j. OFC payment release authorization letters (Ok to Pay letters) cannot be accomplished until all wage conformances have been deemed closed (USDOL responses have been received and there are no pending contractor wage appeals).

k. Job Classifications Descriptions (Laboring Category): While most of skilled and unskilled crafts appearing in Wage Determinations are self-explanatory, the below classifications (not all inclusive) have been described by the NHDOT and are consistent with USDOL requirements. Workers performing in these classes, according to the description, will be classified by contractors accordingly:

1) Asbestos Abatement: All work associated with asbestos abatement shall be classified as "Laborer," unless said work involves piping that will be reinsulated. In these cases, "Asbestos Abatement Worker" shall be used.

2) Blaster: Supervises and assists in locating, loading, and firing blast holes with explosives to break up hard materials. This work includes any of the following duties on-site: determining the spacing and depth of drilled holes; determining the amount of explosives, timing and placement of detonators; handling blasting materials in the work area; loading holes with detonators, primers and explosives; tamping and stemming holes; directing the placement of blasting mats or other flyrock controls; and detonating the charges.

3) Brick Mason (also called Brick Layers): Builds and repairs walls, floors, paths/sidewalks, partitions, fireplaces, chimneys, and other structures with brick, pavers, precast masonry panels, concrete block, and other masonry materials, with or without mortar.

4) Drill Operator: Unless a hand held tool, which can then be classified and performed as a Common/General Laborer, all drill work shall be performed in the "Drill Operator" classification. Conformances, if needed, shall be consistent with this requirement.

5) Guardrail Installer: Except for the "pounder," each person performing guardrail installation work shall be classified as "Guardrail Installer."

6) Ironworker (Reinforcing): Positions and secures steel bars to placement of reinforced concrete; determines number, size, shape and location of reinforcing rods from plans, specifications, sketches and/or oral instructions; places and ties reinforcing steel using wire and pliers, sets rods in place, spaces and secures reinforcing rods. May bend steel rods with hand tools or operate a rod-bending machine; may reinforce concrete with wire mesh; may perform other related duties.

7) Ironworker (Structural): Performs any combination of the following duties to set beams, hang diaphragms, install bolts, torque bolts, test bolts, raise, place and unite girders, columns and other structural steel members to form completed structures or structure frameworks, working as a member of a crew; sets up hoisting equipment for raising and placing structural

steel members; fastens steel members to cable of hoist using chain, cable or rope; signals worker operating hoisting equipment to lift and place steel members. Guides member using guy line (rope) or rides on member to guide it into position. Reads plans; rigs, assembles and erects structural members requiring riveting or welding. May perform other related duties.

8) Lead Abatement Worker: All work associated with lead abatement shall be classified as "Lead Abatement Worker."

9) Stone Mason: Builds stone walls, as well as set stone exteriors and floors, lays/sets all cut stone, marble, slate, or stone, with or without mortar. They work with natural cut stone, such as marble, granite, limestone and artificial stone made of concrete, marble chips, or other masonry materials.

10) Sweeper/Broom Operators: Whenever Sweeper or Broom does not appear in the Wage Determination, contractors may use the Truck Driver classification for this service if the equipment used is of the over the road type (only). However, anytime the contract has an established classification/rate for "Sweeper or "Broom," this classification must be used and the minimum rate, as it appears in the contract, shall apply.

11) Traffic Coordinator: Performs sign placement and maintenance, including proper set up and relocation of construction sign packages and message boards; designs lane closures in accordance with local, state, and Federal requirements. Please do not confuse this classification with Flagger.

6. **Mandatory Training**. Prime Contractors who fail to obtain an annual average (based on the calendar year) of at least 50% "Satisfactory" ratings on all OFC Compliance Field Audit Reports will be required to attend a mandatory 4-hour Contractor Compliance Training Class each spring (as scheduled by the OFC). A principal owner (or executive officer of the company) and his/her payroll accountant shall attend. Note: Compliance ratings on all projects will be averaged whenever a Prime Contractor has multiple projects.

7. **Temporary Suspensions**.

   a. Any Contractor, Subcontractor, or Lower-tier Subcontractor found to be in violation of FHWA Form 1273, Required Contract Provisions, made part of its contract, or has failed to comply with OFC Field Audit requirements, will be required to take corrective action before participating in future projects funded by the Department. Corrective action will include, but not limited to, the submission of certified payrolls or other records and reports necessary to verify compliance with the Provisions.

   b. Any Contractor, Subcontractor or Lower-tier Subcontractor found to have repeatedly violated the FHWA Form 1273, Required Contract Provisions, may be required to complete 4-hours of Federal Contract Compliance Training conducted by the NHDOT Office of Federal Compliance. When mandated, a principal owner and/or company executive and his/her payroll accountant shall attend. Federal Contract Compliance Training must be completed before participation on future projects is authorized. This requirement does not relieve the Contractor of its

obligations under the prime contract, nor does it prevent the Department from seeking other remedies or enforcement action, as provided by the governing Rules, Laws, and Federal Regulations.

c. Companies will be notified of suspensions in writing. Actions the company must take to have participation privileges restored will be clearly indicated. Companies will also be advised that if a satisfactory response is not received within 30 days of receipt of the suspension notice, the company will be considered "non-responsive." In cases where companies are non-responsive, and unpaid wages on the part of the subcontractor or lower-tier subcontractor are involved, the matter will then be deferred to the Prime Contractor for payment of wages as provided in Form FHWA 1273, Required Contract Provisions, Section I, Paragraph 3.

8. **Right To Withhold Payments**. The Department may withhold payments claimed by the Contractor on account of:

   a. Failure of the Contractor to make payments to Subcontractors for materials or labor.

   b. Regulatory non-compliance or enforcement.

   c. Failure to comply with NHDOT Office of Federal Compliance Field Audit Report requirements.

   d. Failure to comply with monthly reporting requirements, as applicable.

   e. For projects with an OJT requirement, failure to submit OJT 1, On-The-Job Training Acknowledgement and Statement of Intent within 30 days of the project start date.

   f. Failure to submit closeout documentation.

   g. All other causes that the Department reasonably determines negatively affect the State's interest.

9. **Final Payment Release**. Once final project records are transferred to the NHDOT Office of Federal Compliance, a final review shall be performed to determine compliance with the Federal provisions. Release of any final payment shall not be made to the Contractor until the Office of Federal Compliance issues a payment release letter (ok to pay) certifying:

   a. All required payrolls, labor, and EEO documentation have been received and deemed complete and correct.

   b. DBE requirements stipulated in the Contract and/or the Required Contract Provisions have been fulfilled.

10. **Deposits and Escrows**. Every attempt is made to complete compliance actions and resolve any disputes before the project is completed and final payments are made. Sometimes, however, corrective actions or disputes continue after completion and provisions must be made to ensure that funds are available to pay any wage restitution that is ultimately found due. In these cases, the project can proceed to final closing provided the Prime Contractor, from payments already provided him/her, provides written evidence a deposit of an amount equal to the potential liability for wage restitution and liquidated damages, if applicable, has

been deposited in an *escrow account*. When a final decision is rendered, the Prime Contractor makes disbursements from the account in accordance with the decision. Deposit/escrow accounts are established for one or more of the following reasons:

a. Where the parties have agreed to amounts of wage restitution that are due but the employer has not yet furnished evidence that all the underpaid workers have received their back wages. The deposit is equal to the amount of restitution due to workers lacking payment evidence. As proper documentation is received, an amount corresponding to the documentation is returned to the depositor. Amounts for any workers who cannot be located are held in the escrow account for three (3) years. Amounts remaining in the account not disbursed by the end of this three-year period shall be returned to the Prime Contractor.

b. Where underpayments are suspected or alleged and an investigation has not yet been completed. The deposit is equal to the amount of wage restitution and liquidated damages, if applicable, that is estimated to be due. If the final determination of wages due is less than the amount estimated and placed in the escrow account, the escrow will be reduced to the final amount and the difference will be returned to the depositor. If the parties agree to the investigative findings, the amounts due to workers will be disbursed from the escrow account in accordance with the schedule of wages due. Amounts for unfound workers will be retained for a period of three (3) years and subsequently disbursed to the depositor as described above in Paragraph 7a.

c. Where the parties are waiting for the outcome of an administrative hearing that has been or will be filed contesting a final determination of wages due. The deposit shall be equal to the amount of wage restitution and liquidated dates, if applicable, that have been determined to be due. Once the final decision is rendered, disbursements from the escrow account are made in accordance with the decision.

Direct questions relating to any of the information above to the NHDOT Office of Federal Compliance (603-271-6752).

SUPPLEMENTAL SPECIFICATION

AMENDMENT TO SECTION 109 -- MEASUREMENT AND PAYMENT

AMENDMENT TO SUBSECTION 109.09 – PAYMENTS TO SUBCONTRACTORS

109.09 Prompt Payment to Subcontractors.

The Prime Contractor shall pay all Subcontractors for the work performed no later than 21 calendar days from the date the Prime Contractor received payment from the Department for said work, including materials in accordance with 109.07 and/or 109.08 paid for in the progress payments. Subcontractors are required to pay their Subcontractors and/or material suppliers, within 21 calendar days from the date they receive payment for satisfactory work performed or supplies received. This Prompt Pay requirement shall be made part of all subcontracts and agreements.

If the Prime Contractor believes that any portion of the payment should be withheld from the Subcontractor, the Prime Contractor shall notify the NHDOT Contract Administrator in writing, prior to the estimate being processed. The NHDOT Office of Federal Compliance shall be made part of this notification. The NHDOT may withhold payment for the portion of work in dispute pending resolution.

This prompt payment provision is a requirement of 49 CFR 26.29 and does not confer third-party beneficiary right or other direct right to a Subcontractor against the Department. This provision applies to both DBE and non-DBE Subcontractors.

Satisfactory Work Performed. Satisfactory work performed shall be defined for purposes of this prompt payment provision as:

1. Upon review, the Engineer finds the work completed in accordance with the contract, plans and specifications, and;

2. Required paperwork, for Progress and Partial payments, including material certifications and payrolls, has been received.

The determination of whether work meets the standards set forth above is the responsibility of the Engineer. If the Subcontractor becomes insolvent after it satisfactorily performs work as defined above but before payment is due, the obligation to pay is not extinguished. (Payment may have to be made to the bankruptcy trustee or to an escrow account for the benefit of creditors.)

The Prime Contractor must include, in all subcontract agreements, notices to Subcontractors of their right to prompt payment, and of the Department's policy prohibiting Prime Contractor's from holding retainage from Subcontractors under 49 CFR 26.29.

Failure of a Prime Contractor or a Subcontractor to comply with these prompt payment provisions may result in sanctions.

Non-Payment Claims. All notifications of failure to meet prompt payment provisions shall be referred by Subcontractors, in writing, to the NHDOT Office of Federal Compliance with a copy supplied to the respective Contract Administrator.

Payment Certifications. The Prime Contractor or any Subcontractor who receives payment for work and/or materials (specifically supplied to the project in excess of $10,000) shall submit a "Monthly Prompt Pay Certification," OFC Form 18, to the NHDOT Office of Federal Compliance no later than the 10th calendar day of each month.

TE/CMAQ Program
Construction Proposal

It is proposed:

To execute the Contract and begin work within 10 days from the date specified in the "Notice to Proceed" and to prosecute said work so as to complete the _____ and its appurtenances on or before _____.

To furnish a Contract Bond in the amount of 100 per cent of the Contract award, as security for the construction and completion of the _____and its appurtenances in accordance with the Plans, Specifications and Contract. The Contractor's attention is called to Section 103.05 of the NHDOT Standard Specifications for road and bridge construction which provides the following guidance: unless specifically waived in the Proposal, upon execution of the Contract, the successful Bidder shall furnish the Agency a surety bond or bonds equal to the sum of the Contract amount. The form of the bond(s) shall be acceptable to the Agency and the bonding Company issuing the bond(s) shall be licensed to transact business in the State of New Hampshire, and....

To certified that the Bidder, in accordance with the requirements of 103.06 and 108.01, intends to sublet, assign, sell, transfer or otherwise dispose of one or more portions of the work and (1) has contacted the appropriate listed disadvantaged businesses and afforded such disadvantaged businesses equal consideration with non-disadvantaged business for all work the Bidder currently proposes to sublet, assign, sell, transfer or otherwise dispose of, (2) may contact additional appropriate disadvantage businesses and will afford such businesses equal consideration with non-disadvantaged businesses for all work the Bidder in the future proposes to sublet, assign, sell, transfer or otherwise dispose of, and (3) will complete enclosed "DISADVANTAGED BUSINESS ENTERPRISE COMMITMENT FORM" and Letters of Intent for each disadvantaged business. The name of the person in the Bidder's organization who has been designated as the liaison officer to administer the disadvantaged business enterprise program is:

_____

(To be completed by the Bidder)

To guarantee all of the work performed under this Contract to be done in accordance with the Specifications and in good and workmanlike manner, and to renew or repair any work which may be rejected, due to defective materials or workmanship, prior to final completion and acceptance of the project.

Enclosed herewith find certified check or bid bond in the amount of _____ _____dollars ($_____), made payable to the Agency as a proposal guarantee which it is understood will be forfeited in the event the Contract is not executed, if awarded by the Agency to the undersigned.

Certification Regarding Debarment, Suspension, and Other Responsibility Matters – Primary Covered Transactions.

(1). The prospective primary participant certifies to the best of its knowledge and belief, that it and all its principals: (a) Are not presently debarred, suspended, proposed for debarment, declared ineligible, or voluntarily excluded from covered transactions by any Federal department or agency; (b) Have not within a three-year period preceding this proposal been convicted of or had a civil judgment rendered against them for commission of fraud or a criminal offense in connection with obtaining, attempting to obtain, or performing a public (Federal, State or Local) transaction or contract under a public transaction; violation of Federal or State antitrust statutes or commission of embezzlement, theft, forgery, bribery, falsification or destruction of records, making false statements, or receiving stolen property; (c) Are not presently indicted for or otherwise criminally or civilly charged by a governmental entity (Federal, State or Local) with commission of any of the offenses enumerated in Paragraph (1) (b) of this certification and (d) Have not within a three-year period preceeding this application/proposal had one or more public transactions (Federal, State or Local) terminated for cause or default. (2). Where the prospective primary participant is unable to certify to any of the statements in this certification, such prospective participant shall attach an explanation to this proposal.

Contract Affidavit

I/We declare under penalty of perjury under the laws of the United States and the State of New Hampshire that, in accordance with the provisions of Title 23 USC, Section 112(c), have not either directly or indirectly entered into any agreement, participated in any collusion or otherwise taken any action in restraint of free competitive bidding in connection with this Proposal.

Dated: _____

(If a firm or individual)

Signature of Bidder_____

By_____

Address of Bidder_____

Names and Addresses of Members of the Firm:

_____

_____

_____

(If a Corporation)

Signature of Bidder_____

Title_____

By_____

Business Address_____

Incorporated under the laws of the State of _____

Names of Officers:

President_____
Name Address

Secretary_____
Name Address

Treasurer_____
Name Address

SUPPLEMENTAL SPECIFICATION

SECTION 107 -- LEGAL RELATIONS AND RESPONSIBILITIES TO PUBLIC

SUBSECTION 107.01 – LAWS TO BE OBSERVED

The intent of this Supplemental Specification is to clarify Bulletin Board requirements.

Replace 107.01's third paragraph titled *Bulletin Board Requirements* with the following:

Bulletin Board Requirements: The Contractor shall erect and maintain a bulletin board on which to post the notices, rates, and related items that are required to be posted. The board shall be **a minimum of 4 foot by 8 foot in order to** allow sufficient space, without overlapping, for both State and Federal poster/information, as required. Additional work classifications and their rates, requested by the Contractor and subsequently approved by the USDOL, shall also be posted. Bulletin boards shall be an enclosure and the posted documents shall be protected from the elements by glass or Plexiglas. Boards shall be erected on the site of work, be placed in a conspicuous and accessible location where it can be easily seen by all workers. **If placing the bulletin board on the site of work is not feasible, either for safety reasons or due to the work taking place, the Contractor may recommend placing it in an adjacent location subject to NHDOT approval. If the NHDOT deems the alternate location as unsuitable (the location is too distant or will not be utilized by all subcontractors, etc.), the NHDOT may instead require the use of employee bulletin board handouts in accordance with FHWA policy. Contractors have two options for posters: Option 1 - Using "all-in-one" Federal and State posters; or Option 2 - Arranging posters in a predetermined manner (see attached) as provided by the NHDOT.** The bulletin board shall remain the property of the Contractor and shall be removed upon completion of the Work.

New Hampshire Department of Transportation Bulletin Board Diagram

(Revision 11-8-12)

NHDOT PROJECT: (NAME) (NUMBER)

Federal Posters

1
Equal Employment Opportunity (EEO) is The Law
(OFCCP-1420)
Rev. 11/09

2
NOTICE Federal-Aid Project
(FHWA-1022)
Rev. 11/11

3
Employee Rights Under the Davis Bacon Act (WH-1321) [substitute for FHWA-1495]
Rev. 4/09

4
Employee Rights and Responsibilities Under the Family & Medical Leave Act (WH-1420)
Rev. 1/09

5
Employee Polygraph Protection Act
(WH-1462)
Rev. 1/12

6
Your Rights Under Uniformed Services Employment & Reemployment Rights Act (USERRA)
Rev. 10/08

7
Job Safety & Health It's the Law
(OSHA-3165)
Minimum Size: 8 1/2 X 14
Rev. 12/06

State Posters

8
Protective Legislation Law (Pay Day Notice)
Rev. 10/12

9
The Whistleblowers' Protection Act (RSA 275-E Requirement)
Rev. 8/12

10
The Workers' Right to Know (Toxic Substances)
Rev. 10/12

11
Unemployment Notice (NH Employment Security Office)
Rev. 1/12

12
Workers' Compensation (from Insurance Provider)

13
Criteria to Establish an Employee or Independent Contractor
Eff: 8/06/12

Other Required Postings

14
24-Hour Emergency Contact Information

15
Contractor's EEO Officer Appointment Letter (must have all contact information)

16
Contractor's EEO & Harassment Policy Statement

17
NHDOT Federal Compliance Officer Contact Information
(OFC Poster 1)

18
Davis-Bacon Wage Rates

19
Additionally Approved Wage Rates

SPECIAL ATTENTION

CONVICT PRODUCED MATERIAL

In accordance with the requirements of the Federal regulations (23 U.S.C. 114(b)(2), 23 CFR 635.417), essentially all convict produced material is prohibited from Federal–aid highway construction projects. More specifically, materials produced after July 1, 1991, by convict labor, may only be incorporated in a Federal-aid construction projects if: 1) such materials have been produced by convicts who are on parole, supervised release, or probation from a prison; or 2) such material has been produced in a qualified prison facility, e.g., prison industry, with the amount produced during any 12-month period, for use in Federal-aid projects, not exceeding the amount produced, for such use, during the 12-month period ending July 1, 1987*.

* Because the Department, Federal Highway Administration, nor New Hampshire Correctional Industries can produce documents to meet condition 2 above, this condition cannot be met for New Hampshire convict produced material.

EEO OFFICER NOTIFICATION AND PROGRAM COMPLIANCE CERTIFICATION 2015

(Companies that perform Federal-aid contract work of $10,000 or more annually must submit this form each January)

FROM (Name of Company): _____ _____
Date

TO: NH DOT Office of Federal Compliance

In accordance with the Required Contract Provisions (Form FHWA 1273), the following information is furnished:

Initial Next to Each

THIS IS TO CERTIFY:

_____This company has accepted the following statement as our operating policy: "It is the policy of this Company to assure that applicants are employed, and that employees are treated during employment, without regard to their race, religion, sex, color, national origin, age or disability. Such action shall include: employment, upgrading, demotion, or transfer; recruitment or recruitment advertising; layoff or termination; rates of pay or other forms of compensation; and selection for training, including apprenticeship, pre-apprenticeship, and/or on –the-job training."

_____Periodic meetings with supervisory and personnel office employees were conducted before the start of work and will be accomplished once every six (6) months.

_____All new supervisory or personnel office employees were given a thorough indoctrination by the EEO Officer, covering all major aspects of the contractor's EEO obligations within 30 days following their employment start date.

_____All personnel who are engaged in direct recruitment for the project were instructed by the EEO Officer in the contractor's procedures for locating and hiring minority group employees.

_____This company's EEO policy was reviewed and reaffirmed within the last 12 months and was brought to the attention of all our employees by the following means (check as applicable):

☐ Meetings/Briefings ☐ Employee Handbook ☐ Other: _____

_____A written record was made of the above meetings/briefings, person's attending, and the subject matter that was discussed. Signed acknowledgements of attendance at EEO meetings/training are on file.

_____I have **attached** a copy of this company's **EEO Appointment Letter** and **Policy Statement**.

***SIGNED CERTIFICATION AND NAME OF CORPORATE EEO OFFICER:**

_____ _____
Signed & Printed Name Title or Position in Firm

_____ _____
Address (Include Zip Code) Telephone (Include Area Code)

Email Address: _____

* Named individual must be capable of effectively administering and promoting an active contractor program of EEO and who must be assigned adequate authority and responsibility to do so.

(See Enclosures)

OFC Form 2 (Rev: 12-12-13) Previous editions cannot be used.

NEW HAMPSHIRE DEPARTMENT OF TRANSPORTATION

LABOR STANDARDS INTERVIEW

PROJECT NAME AND NUMBER

PRIME CONTRACTOR

NAME OF COMPANY YOU ARE EMPLOYED BY

NAME OF EMPLOYEE

MAILING ADDRESS

PHONE NUMBER

NAME OF SUPERVISOR

EMPLOYMENT DATES

AT PROJECT

OVERALL W/COMPANY

WORK CLASSIFICATION

DO YOU SOMETIMES WORK IN OTHER CLASSIFICATIONS?

HOURS OF WORK

DO YOU WORK OVER 8 HOURS PER DAY ☐ YES ☐ NO

WAGE RATE

S.T.

O.T.

HOW ARE YOU PAID? ☐ CASH ☐ CHECK

ARE YOU PAID WEEKLY? ☐ YES ☐ NO

IS ANY MONEY DEDUCTED FROM YOUR PAY OTHER THAN INCOME TAX AND SOCIAL SECURITY?

☐ YES ☐ NO *(If "yes," state what types of deductions these are)*

LIST OF DEDUCTIONS:

FRINGE BENEFITS?

☐ **NONE** ☐ **VACATIONS** ☐ **HOLIDAYS** ☐ **MEDICAL** ☐ **DENTAL** ☐ **PENSION**

DO YOU TAKE A LUNCH BREAK? ☐ **YES** ☐ **NO**

ARE YOU PAID FOR THIS TIME? ☐ **YES** ☐ **NO**

DESCRIBE THE WORK YOU DO WITH YOUR OWN HANDS, TOOLS USED, AND WHERE YOU WORK

WHO DO YOU WORK WITH AND WHAT DO THEY DO?

DO YOU FILL OUT WEEKLY TIME SHEETS? ☐ **YES** ☐ **NO**

ARE YOU AN APPRENTICE OR TRAINEE? ☐ **YES** ☐ **NO**

HAVE YOU EVER BEEN THREATENED OR COERCED INTO GIVING UP ANY PART OF YOUR PAY? ☐ **YES** ☐ **NO**

COMMENTS:

IS PERMISSION GIVEN TO DIVULGE TO YOUR EMPLOYER THE INFORMATION IN THIS STATEMENT?

☐ YES ☐ NO **NO INFORMATION IS RELEASED WITHOUT YOUR WRITTEN CONSENT**

CERTIFICATION OF EMPLOYEE

I HAVE READ THE INFORMATION REPORTED AS OBTAINED FROM ME AND CERTIFY IT TO BE CORRECT TO THE BEST OF MY BELIEF.

DATE

SIGNATURE OF EMPLOYEE

DATE

SIGNATURE OF INTERVIEWER

INTERVIEWER'S EVALUATION: IS THE EMPLOYEE PROPERLY CLASSIFIED? ☐ YES ☐ NO

IS THE WORKER PROPERLY PAID? ☐ YES ☐ NO

DUTIES OBSERVED BY THE INTERVIEWER (PLEASE BE SPECIFIC):

DATE

TIME

SIGNATURE

MUNICIPAL PROJECT INFORMATION & STATUS REPORT

From:_____(Name of Firm) Date: _____

To: NHDOT – OFFICE OF FEDERAL COMPLIANCE
7 HAZEN DRIVE
CONCORD, NH 03302-0483

Note: Fax to (603) 271-8048

Re:_____ _____
Project Name and State Job Number **County**

Please check only one box on each submission:

☐ **PROJECT START DATE:** _____

☐ **PROJECT WAS SUSPENDED ON:** _____

☐ **PROJECT WAS RESUMED ON:** _____

☐ **PROJECT WAS COMPLETED ON:** _____

_____ _____
Printed Name &Title of Submitting Official **Signature & Phone**

**** COMPLETE THE BELOW ON FIRST FORM 13 SUBMISSION ONLY ****

_____ _____
Printed Name of Resident Engineer & Cell Phone **Email Address**

_____ _____
Printed Name/Division/District Manager **Phone & Email**

☐ **Directions to the Prime Contractor's Field Office is attached**

PROJECTED SUBCONTRACTORS:	**ESTIMATED $ AMOUNT**

CONTRACTOR ACKNOWLEDGEMENT CERTIFICATION
(SUBCONTRACTOR APPROVAL)

Prime Contractor:_____ Date: _____
Subcontractor/Lower-tier/Consultant_____
Project Name & Number:_____

PRIME CONTRACTOR CERTIFICATION (ITEMS 1 – 6 BELOW APPLY, UNLESS OTHERWISE INDICATED): I hereby certify the below documentation (as checked) was included in, and made part of, the subcontractor agreement entered into with the firm named above.

☐ This **is not** a Federally-funded construction project (Items #1 and #5 below must be checked – only)

☐ 1. NHDOT Subcontracting Procedures
☐ 2. Required Contract Provisions for Federal-Aid Construction Contracts (Form FHWA 1273, Rev: 5/12)
☐ 3. *41 CFR 60-4.2 and 41 CFR 60-4.3 (Solicitations and Equal Opportunity Clauses)
☐ 4. Disadvantaged Business Enterprise (DBE) Policy and DBE Program Requirements (Standard Spec 103.06)
☐ 5. NHDOT 21-Day Prompt Pay Supplemental Specification to Standard Specification 109.09
☐ 6. Applicable wage rates from Contract Proposal

*Applicable only to contracts or subcontracts of $10,000 or more

Printed Name (Prime): _____ Signature: _____

SUBCONTRACTOR CERTIFICATION: As an authorized official of this company, I certify that this company is in full compliance with applicable Federal/State of NH laws (NHDOT Standard Specification 107.01, Laws to be Observed).

☐ The documents selected above were made part of our agreement/contract and give assurance that this company will comply with the Required Contract Provisions (Form FHWA 1273), and will properly obtain approval, before the start of work, for any portion of work sublet to a lower-tier Subcontractor.

☐ A Work Certificate and supporting documentation to affirm compliance with NH RSA 228:4-b is attached. This Company understands and acknowledges that on Public Transportation Projects in NH there can be no exemptions, for Workers Compensation (WC) Insurance, which includes owners and executive officers, if performing work on site.

☐ No ☐ Yes – This company has WC exclusions (cannot work on site): (Name: _____)

☐ This company is properly registered and is in *good standing* or *active* with the NH Secretary of State's Office.

☐ This company has submitted an OFC Form 14a, "Contractor Assurances," for this calendar year.
We ☐ Do Not ☐ Do perform Federal-aid work in excess of $10,000 annually (OFC Form 2 required every January)

☐ I hereby certify this company is in full compliance with NH Employment Security (NHES) Office and all workers are being correctly reported to NHES (ID#: _____). Those not being reported correctly pass the NHES's "ABC Test," RSA 282-A9III(a)(b)(c), and, as such, would be considered Independent Contractors by the NHDOT and would require a subcontractor approval submission prior to working on site. Note: Certification for out-of-state contractors is completed on OFC Form 14b and must be submitted each January as part of the NHDOT's Annual Assurances requirement.

☐ I hereby certify this company and its principals are not presently debarred, suspended, proposed for debarment, declared ineligible, or voluntarily excluded from covered transactions by any Federal/State department or agency and have not been convicted or had civil judgment rendered within the past three years.

Firm:_____
Address:_____
_____
Telephone Number:_____
Federal I.D. Number:_____

_____
Printed Name and Title

_____
Signature

_____
Date

New Hampshire DOT
Department of Transportation

ANNUAL CONTRACTOR ASSURANCES
FEDERAL-AID CONTRACTS

All participants of Federal-aid contracts offered through the New Hampshire Department of Transportation are required to submit this form each January

_____(Contractor), hereinafter referred to as the "PARTICIPANT," Hereby agrees that as a condition of receiving payment in connection with work performed on any New Hampshire Department of Transportation (NH DOT) Federally assisted contract it will comply with the Required Contract Provisions (FHWA Form 1273), and all requirements imposed by the NH DOT Office of Federal Compliance pursuant to the implementing regulations, applicable U.S. Department laws, and other pertinent directives, to that end the PARTICIPANT HEREBY GIVES THE FOLLOWING SPECIFIC ASSURANCES with respect to its participation in the Federal-aid Highway Program:

Initial Next to Each

1. _____ That the PARTICIPANT shall submit weekly Certified Payroll Reports (CPRs) and ensure that:

   a. CPRs are submitted to the NHDOT no later than 14 calendar days from the end of the week (Saturday) in which work was performed

   b. CPRs are submitted in the proper format and contain all required information

   c. Each employee has been properly classified and paid for the time worked in each classification according to the minimum hourly wage(s) stipulated by the Wage Decision applicable to each of its contracts

   d. Anytime the contract has multiple wage rates (multiple counties, states, or categories, i.e., highway, building, heavy, etc.) that either the highest rate of pay is paid for the classification or the payroll clearly indicates which wage schedule applies to the work performed (listing work classifications twice, stipulating which rates apply, as applicable).

   e. Fringe benefit breakouts are provided with each payroll submission, if applicable.

   f. Only allowable deductions have been taken and that "other" deductions are fully described on payrolls.

   g. Salaried Forepersons/Superintendents performing in a classification more than 20% of the workweek are shown on payrolls having all pay and deduction information shown.

   h. Owners performing work on site are included on payrolls and have the classification of work shown followed by "Owner," and that hours worked on site are also indicated (no other information is required).

2. _____ The PARTICIPANT shall also be responsible for ensuring compliance of the same for any subcontractor or lower-tier subcontractor with which it holds an agreement under a Federal-aid contract.

3. _____ That the PARTICIPANT shall review the Wage Decision in each of its contracts and submit an Additional Work Classification Request for each classification that does not appear in the applicable Wage Decision prior to using the classification on the project.

4. _____ That the PARTICIPANT shall not sublet, assign or otherwise dispose of any portion of the contract without approval from the NH DOT and acknowledges that any work performed by an unapproved subcontractor or lower-tier subcontractor shall not be paid for by the NHDOT. In the event that Consent is obtained after some or all of the work is performed, all work done prior to Consent will not be paid.

5. _____ That the PARTICIPANT is in full compliance with the Immigration Reform and Control Act of 1986 and has fulfilled all Form I-9 requirements by verifying identification and authorization to work for each employee reported on the payroll.

6. _____ That the PARTICIPANT acknowledges that any work performed or services provided under a Federal-aid contract shall be considered *satisfactorily completed* and payable only after the PARTICIPANT has fulfilled the contract requirements of the agency, including the submission of all documentation required by the specifications and the contract. Satisfactory completion of work performed shall be defined, for purposes of the prompt payment provision, when the Engineer finds the work completed in accordance with the contract, plans and specifications and required paperwork, for Progress and Partial payments, including material certifications and payrolls, has been received. The PARTICIPANT shall not disperse payment for an item of work under the contract without first obtaining certified payrolls from its subcontractors or lower-tier subcontractors, verifying the payment of wages according to paragraph "1." above.

7. _____The PARTICIPANT acknowledges that a breach of any of the stipulations contained in the Required Contract Provisions, FHWA Form 1273, shall be sufficient grounds for withholding of progress payments, withholding of final payment, termination of the contract, suspension/debarment or any other action determined to be appropriate by the NHDOT and FHWA.

8. _____ The PARTICIPANT acknowledges that an executive officer/owner of its company and their payroll officer may be required to complete 4-hours of Federal Contractor Compliance Training if found to have repeatedly violated the Required Contract Provisions. When mandated, Contractor Compliance Training must be completed before participation on future projects is authorized. This requirement does not relieve the Contractor of its obligations under the prime contract, nor does it prevent the Department from seeking other remedies or enforcement action, such as suspension or debarment.

9. _____ That the PARTICIPANT understands that a Work Certificate and supporting documentation to affirm compliance with NH RSA 228:4-b is submitted as part of its consent to sublet package and that the said Work Certificate includes all Work Classification Codes to be utilized on the project and that Workers Compensation Insurance covers all individuals performing work on site.

10. _____ That the PARTICIPANT acknowledges and understands it must list any Workers Compensation Insurance exclusions on the OFC Form 14 as part of its consent to sublet package.

11. _____ That the PARTICIPANT, in order to participate in any public project offered through the NH DOT, shall register its business name with the NH Secretary of State's Office and remain in *good standing* throughout the period of participation.

12. _____ That the PARTICIPANT shall maintain detailed pay records and other records documenting its compliance, and all efforts to comply, with the nondiscrimination and payroll requirements of the FHWA Form 1273, and shall make these records available for inspection by authorized representatives of the NH DOT, the U.S. Department of Labor, and the Federal Highway Administration at reasonable times and places for a period of 3 years following the completion of the contract work.

13. _____ That the PARTICIPANT is fully aware that it may seek compliance assistance and training for itself, its subcontractors, or lower-tier subcontractors by contacting the NH DOT Office of Federal Compliance.

14. _____ That the PARTICIPANT acknowledges that the NHDOT Standard Specifications for Road and Bridge Construction, Section 107.01, Laws to be Observed, applies.

15. _____ **FOR NEW HAMPSHIRE BASED CONTRACTORS**: That the PARTICIPANT shall be in full compliance with the New Hampshire Employment Security (NHES) Office and all workers are being correctly reported to NHES. Those not being reported correctly pass the NHES' "ABC" test, RSA 282-A9III(a)(b)(c), and, as such, would be considered Independent Contractors by the NHDOT and would require subcontractor approval submission prior to working on site.

    a. Note: Our NHES Reporting ID Number is: _____.

16. _____ **FOR OUT-OF-STATE CONTRACTORS ONLY**: That the PARTICIPANT shall complete an OFC Form 14b as part of its Annual Assurances requirement to certify its company compliance with NHES requirements.

THESE ASSURANCES are given in consideration of and for the purpose of obtaining any and all contracts funded through the New Hampshire Department of Transportation under the Federal-aid Highway Program. The person whose signature appears below is an executive officer or owner of:

_____.
(Company Name)

_____ Date: _____
Printed Name of Owner/Executive Officer (only)

_____
Signature

New Hampshire DOT
Department of Transportation

John Morton Building
P.O. Box 483, 7 Hazen Drive
Concord, NH 03302-0483

Distribution:
- NHDOT Planning and Community Assistance
- Town
- Consultant Firm

OFFICE OF FEDERAL COMPLIANCE CONSULTANT/TOWN EVALUATION

CONSULTANT (or TOWN) / PROJECT INFORMATION

Name of Consultant Company or Town	
Name of Resident Engineer	
NHDOT Project Name and Number	
Contract $ Amount	
Contract Start Date	
Completion Date	

OVERALL EVALUATION RATING:

*Needs Improvement ☐ Met Requirements ☐

*Comments are mandatory

_____

_____

_____

RECOMMENDATION: From a Labor Compliance standpoint, would we recommend using this Consultant on a future Federally funded, Municipally Managed construction project?

☐ YES ☐ YES – however we recommend the Consultant (or Town) attends Labor Compliance Training
☐ *NO

*Comments are mandatory

_____

_____

_____

PERFORMANCE

1. Ensured only those contractors who were approved by the NHDOT Office of Federal Compliance performed work on site (no violations of the Required Contract Provisions and RSA 228:4-b).

   Needs Improvement ☐ Met Requirements ☐ Not Applicable ☐

2. Monitored "open" Office of Federal Compliance Field Audit Reports and actively worked with Contractors and the Office of Federal Compliance to close Field Audits within the time allowed.

   Needs Improvement ☐ Met Requirements ☐ Not Applicable ☐

3. Immediately informed the OFC on the current status of the project by providing an OFC Form 13, Project Status Report when the status of the project changed. Immediate is defined as 5 calendar days or less.

   Needs Improvement ☐ Met Requirements ☐ Not Applicable ☐

4. Maintained the OFC Form 3, Payroll Log Sheet, in an error free manner; added contractors to the form once approved by the NHDOT; annotated when each contractor performed work on site by making the appropriate annotation; noted when each corresponding payroll was received by writing in the date the payroll was received.

   Needs Improvement ☐ Met Requirements ☐ Not Applicable ☐

5. Ensured the Prime complied with project sign-in sheet requirements by ensuring all workers (Prime and all approved subcontractors) signed in on the project, prior to performing work, on a daily basis.

   Needs Improvement ☐ Met Requirements ☐ Not Applicable ☐

6. Followed-up with the Prime Contractor, in writing, whenever any payrolls were not received on time (7 calendar days from the end of the week in which work was performed) and provided copy to the NHDOT OFC.

   Needs Improvement ☐ Met Requirements ☐ Not Applicable ☐

7. Monitored work performed on site and compared it to the information being reported on certified payroll reports to ensure contractors were correctly reporting information on certified payroll reports, and immediately notified the NHDOT Office of Federal Compliance whenever any inconsistencies/errors were noted.

   Needs Improvement ☐ Met Requirements ☐ Not Applicable ☐

DISADVANTAGED BUSINESS ENTERPRISE (DBE)

8. Observed work performed by DBEs, ensured that a Commercially Useful Function (CUF) is being carried out in accordance with 49 CFR 26.55, and completed CUF Reviews for each DBE contractor working on site.

Needs Improvement ☐ Met Requirements ☐ Not Applicable ☐

ON THE JOB TRAINING PROGRAM (OJT)

9. Maintained and monitored project-level OJT records and requirements & ensured the timely submission of OJT Weekly Training Reports from contractors; monitored the trainee's progress, and faxed training completion reports to the NHDOT OJT Monitor on a weekly basis.

Needs Improvement ☐ Met Requirements ☐ Not Applicable ☐

FINAL CLOSEOUT PROCEDURES

10. Informed Office of Federal Compliance when the Final Inspection was to take place.

Needs Improvement ☐ Met Requirements ☐ Not Applicable ☐

11. Submitted OFC Form 13, Project Status Report, to the OFC immediately (within 5 calendar days) upon completion of the project.

Needs Improvement ☐ Met Requirements ☐ Not Applicable ☐

12. Following the completion of work, verified all required payrolls were received on time; that a final review of the payrolls was accomplished; that the OFC Form 3, Payroll Log Sheet(s) was finalized; that all daily sign-in sheets were accounted for and collected; and all documents were provided to the NHDOT Office of Federal Compliance no later than 14 calendar days from the date the project was completed.

Needs Improvement ☐ Met Requirements ☐ Not Applicable ☐

OPTIONAL CLOSING COMMENTS:

Consultant Evaluation Prepared By:

Federal Compliance Officer Name	Signature/Date
Jay Ankenbrock Chief of Labor Compliance	Signature/Date

Subcontractor/Lower-Tier/Consultant Name:_____

Project Name: _____

Project Number: _____

WORK CERTIFICATE for CONTRACTORS BEFORE BEGINNING THEIR WORK on PUBLIC PROJECTS

Certification Requirements of RSA 21-I:80 and RSA 228:4-b

By New Hampshire law, before any work is done on any major state project or any work on any highway, bridge or other construction, reconstruction, alteration or maintenance project, each contractor, subcontractor and independent contractor shall complete and sign this form and provide the following documents:

1. Attach a certificate of your current workers' compensation insurance coverage, naming NH Department of Transportation, Office of Federal Compliance, 7 Hazen Drive, Concord, NH 03302-0483 as the certificate holder, showing coverage specific for work within the State of New Hampshire. **[Note that any person directly performing work on a project, or who is actively engaged in on-site work on any construction site, cannot elect exclusion from workers' compensation coverage under RSA 281-A:18-a.]**

2. Provide below an estimate of the total number of workers anticipated to be employed on the project during the contract period, and a number of days (8-hour periods), applied to each insurance classification code applicable to the work to be performed:

Number of workers	Days	Classification code & description of work

[Attach additional sheets as necessary]

3. Provide proof of compliance with NH Department of Labor safety program requirements under RSA 281-A:64, in the following form:

a. By signing and submitting this form, you agree to provide employees with safe employment; to furnish personal protective equipment, safety appliances and safeguards; to ensure that such equipment, appliances and safeguards are used regularly; and to adopt work methods and procedures which will protect the life, health and safety of employees.

b. Do you have 15 or more employees? **YES** or **NO** (Please Circle One)
If yes, you agree to administer a joint loss management committee composed of the following named persons:

Employer representative(s):

Employee representative(s):

c. Do you have 15 or more employees? **YES** or **NO** (Please Circle One)
If yes, you are required to prepare a written safety program and file a Safety Summary Form with the Commissioner of Labor; attach to this form the Safety Summary Form prepared under Department of Labor regulations Lab 515.16 and Lab 602.02. (This requirement applies to all employers, including non-resident employers. The Safety Summary Form can be downloaded from the NH Department of Labor website forms link at http://www.nh.gov/labor/forms/safety-summary.htm.)

By signing and submitting this form, you are providing a sworn statement that workers' compensation coverage shall remain in effect, covering each employee who is not legally excluded from coverage, for the duration of his or her anticipated work on the project. Any person who fails to comply or who falsifies information is subject to a civil penalty of up to $2,500 plus $100 per employee per day of non-compliance and shall not be allowed to bid or work on state projects for up to 5 years.

Signed and submitted on this date: _____, 20__

By this contractor, subcontractor or independent contractor:

Business Name: _____

Address: _____

Telephone number: _____ Fax number: _____

Owner or Authorized Executive signature: _____

Printed name and job title: _____

This Form and all supporting documentation shall be returned to the Prime Contractor, who shall forward it with each subcontractor approval submission to: NH DOT

PROJECT CLOSEOUT

PART 1 FINAL REIMBURSEMENT SUBMISSION

(CONSTRUCTION PROJECTS)

Program: _____

Application #: _____

Project Manager: _____

Project Name: _____

State Number: _____

Federal Number: _____

CHECKLIST TO BE FILLED OUT BY PROJECT SPONSOR AND RETURNED TO NHDOT WITH FINAL REIMBURSMENT REQUEST

Documents required for processing final reimbursement

Checklist Completed By: _____

Project closeout forms

- [ ] Contractor's Final Lien Waiver submitted with signatures
- [ ] Certificate of final completion of work submitted with signatures
- [ ] Consent of Surety Company to Final Payment submitted with signatures

Other forms & required documents

- [ ] As-Built Drawings submitted
- [ ] Before & After photos submitted (Prints or Digital)
- [ ] Materials Certification for Municipally Managed Projects
- [ ] Completion and Acceptance letter from project sponsor with:
  - Statement all punch list items have been addressed
  - Date construction was completed & accepted by sponsor
  - Statement that project is turned over to the sponsor for maintenance
- [ ] Financial summary showing funding breakdown by phase.
  - Both participating and non-participating work must be shown
- [ ] Send final reimbursement request, documents and completed checklist to NHDOT

CHECKLIST TO BE FILLED OUT BY NHDOT FOR FINAL REIMBURSEMENT PROCESSING

Financial checks for final reimbursement

Checklist Completed By: _____

- [ ] Check that Municipality or sub-recipient has provided the latest complete single audit report (SAR) in accordance with OMB circular A-133 or a letter stating that an SAR was not required
- [ ] Labor Compliance (Approval to pay final reimbursement request)
- [ ] Verify last estimate was approved by FHWA
- [ ] Verify no negative amounts exist for any of the phases
- [ ] Send final reimbursement letter to project sponsor and final reimbursement memo to Finance & Contracts
- [ ] Send Project completion form to project sponsor for signatures

PROJECT CLOSEOUT
PART 2 FINAL VOUCHER

Program: _____

Application #: _____

Project Manager: _____

Project Name: _____

State Number: _____

Federal Number: _____

CHECKLIST TO BE FILLED OUT BY PROJECT SPONSOR AND RETURNED TO NHDOT WITH PROJECT COMPLETION FORM

Checklist Completed By: _____

☐ Sign Project Completion Form and return form and checklist to NHDOT before _____

CHECKLIST TO BE FILLED OUT BY NHDOT FOR CLOSING PROJECT AND REQUEST OF FINAL VOUCHER DATE

Checklist Completed By: _____

☐ Received Signed Project Completion Form

☐ Send Email sent to Supervisor in Finance & Contracts to close project and request final voucher date (Walker Nelson)
- cc Finance & Contracts (Armand Nolin, Carol Spottiswood)
- cc Project Programming (Bill Jennison, Karla Kemp, Linda Wescott Dusenberry)
- cc Project Manager
- cc FHWA (Terri Marcelli)

☐ Received Final Voucher email from Project Programming (Sherry or Dawn)

☐ Send Final Voucher Date to sponsor with date of archive retention

☐ Archive Project files with date of final voucher

☐ Update Status Report for Programs (Email program manager project final voucher date)

Final Voucher Date: _____

Project Close-Out Forms

CONTRACTOR'S FINAL LIEN WAIVER

(page 1 of 2)

OWNER'S CONTRACT NO.: _____ ENGINEER' PROJECT NO.: _____
AGREEMENT DATE: _____

CONTRACT TITLE: _____

To: _____ (Owner)
_____
_____

APPLICATION FOR FINAL PAYMENT

The undersigned hereby certifies that the amount owed set forth below constitutes the entire value of all work performed and services rendered by, through or under the undersigned with respect to the project not heretofore paid for up to and including the period covered by the above Application for Final Payment; that all work covered by such Application has been incorporated into the project and title thereto has passed to the Owner free and clear of all liens, claims, security, interests or encumbrances; and that no work covered by such Application has been acquired subject to an agreement under which any interest therein or an encumbrance thereon is retained by the seller or any other person. In consideration of payment of the requisition, the undersigned hereby releases the Owner from all claims of lien which the undersigned has regarding the Project.

The undersigned, in order to induce the Owner to pay the requisition, hereby represents that it has paid or will pay from the proceeds of the requisition all sums due to those parties who have performed work or provided materials to the undersigned in connection with the Project, and that it will on request of the Owner provide written evidence of the discharge by the undersigned of its obligations to such parties.

Executed under seal as of this _____ day of _____, 20___.

Amount Owed to Contractor by Owner as Final Payment:
$_____ (total value of project including change orders)

Amount Unpaid From Previous Application for Payment:
$_____

CONTRACTOR'S FINAL LIEN WAIVER

(page 2 of 2)

From: _____ (Contractor)

_____

_____

_____

Authorized Representative Signature

_____

Name and Title (printed)

NOTARY:

Then personally appeared the above named _____ and acknowledged the foregoing to be the free act and deed of the above-named Contractor, before me.

Subscribed and sworn to on the _____ day of _____, 20___.

Notary Public:_____

My Commission Expires:_____

CERTIFICATE OF FINAL COMPLETION OF WORK

(page 1 of 2)

OWNER'S CONTRACT NO.: _____ ENGINEER' PROJECT NO.: _____
AGREEMENT DATE: _____

CONTRACT TITLE: _____

FINAL COMPLETION DATE PER AGREEMENT AND CHANGE ORDERS: _____
ACTUAL DATE OF FINAL COMPLETION: _____

FINAL CERTIFICATION OF CONTRACTOR

I hereby certify that the Work as identified in the Final Payment Request dated _____ _____for the above-noted construction Contract represents full compensation for the actual value of work completed. Additionally, all work completed conforms to the terms of the Agreement and authorized changes.

_____ _____
CONTRACTOR Date

_____
Authorized Representative's Signature

_____
Name & Title

FINAL CERTIFICATION OF ENGINEER

I have reviewed the Contractor's Final Payment Request dated _____ and hereby certify that to the best of my knowledge, the cost of the work identified on the Final Payment Request represents full compensation for the actual value of work completed and that the work has been completed in accordance with the terms of the Agreement and authorized changes.

_____ _____
ENGINEER Date

_____
Authorized Representative's Signature

_____
Name & Title

CERTIFICATE OF FINAL COMPLETION OF WORK

(page 2 of 2)

FINAL ACCEPTANCE OF OWNER

I, as representative of the Owner, accept the above Final Certifications and authorize Final Payment in the amount of $_____ and direct the Contractor's attention to the General Conditions. The guaranty for all Work completed subsequent to the date of Substantial Completion, expires _____year from the date of this Final Acceptance.

At a meeting of the_____(Town Council/Selectmen/Alderman), the Owner, _____(Name of the community) has accepted the constructed project.

_____ _____

OWNER Date

_____

Authorized Representative's Signature

_____

Name & Title

END OF SECTION

CONSENT OF SURETY COMPANY
TO
FINAL PAYMENT

OWNER'S CONTRACT NO.: _____ ENGINEER'S PROJECT NO.: _____
AGREEMENT DATE: _____
BOND NUMBER: _____

CONTRACT TITLE: _____

To: _____ (Owner)
_____
_____

From: _____ (Contractor)
_____
_____

In accordance with the provisions of the Contract between the Owner and the Contractor as indicated above, the _____(Surety) on the bond of _____ (Contractor) hereby approves of the final payment to the Contractor, and agrees that final payment to the Contractor shall not relieve the Surety Company of any of it's obligations to the _____ _____ (Owner) as set forth in the said Surety Company's Bond.

IN WITNESS WHEREOF, the Surety Company has hereunto set its hand this _____ day of _____, 20___.

_____
Surety Company

_____
Signature of Authorized Representative

_____
Name & Title

Attest: (Seal)

Note: Power of Attorney should be attached in instances where same applies.

NHDOT Quality Assurance Program for Municipally Managed Federal-aid Projects

Submitted by: _____ 11-19-10
Administrator, Bureau of Materials & Research — Date

Submitted by: _____ 11-19-10
Municipal Highway Engineer — Date

Approved by: _____ 11-24-10
Division Administrator - FHWA — Date

NHDOT Quality Assurance Program
Municipally Managed Federal-aid Projects

The legislation establishing the Federal-aid Highway program, Title 23 United States Code, requires that Federal-aid projects not on the National Highway System be constructed in accordance with State construction standards (23 U.S.C. 109(p)). The New Hampshire Department of Transportation (NHDOT) has established this quality assurance program to address the materials portion of this requirement for Federal-aid Municipally Managed projects.

This document refers to items by numbers used in the NHDOT Standard Specifications for Road and Bridge Construction and it is intended that Municipally Managed projects use these specifications unless the NHDOT approves an equivalent specification.

It is the policy of NHDOT to provide assurance that the materials and workmanship incorporated into Municipally Managed highway projects conform, or substantially conform, to the requirements of the plans and specifications including approved changes. To accomplish this, the quality assurance program provides for an acceptance program, an independent assurance program, a laboratory qualification program, and a materials certificate as follows:

1. <u>DEFINITIONS</u>

- Acceptance Samples and Tests – All of the samples and tests performed by qualified testing personnel used for determining the quality and acceptability of materials and workmanship which have been or are being incorporated into the project. Acceptance tests determine the conformance of the material to the correct specifications. The results are used to determine acceptance or rejection and may be used to adjust the level of pay for the material.
- Independent Assurance Program – Independent samples and tests, or observation of test procedures, performed by Materials and Research (M&R) personnel who do not normally have direct responsibility for quality control or acceptance sampling and testing. These tests are used for the purpose of making independent checks of the reliability of the results obtained in acceptance sampling and testing and not for determining the quality or acceptability of the materials and workmanship directly.
- Method Specifications - Specifications that direct the contractor to use specified materials in definite proportions and specific types of equipment and methods to place the material. Each step is usually directed by the Municipality.
- QC/QA Specifications - A combination of end result specifications and materials and methods specifications. The contractor is responsible for QC (process control), and the municipality is responsible for acceptance of the product. QA specifications are statistically based specifications that use methods such as random sampling and lot-by-lot testing that let the contractor know if the operations are producing an acceptable product and establish the pay for the item. This program includes sampling and testing requirements for QC/QA hot mix

asphalt and concrete items that use random sampling and testing to determine if specified properties are met and to establish the final pay.

- Quality Control – This constitutes the inspection of equipment and the material sampling and testing done by the Contractor to control his operations.
- Qualified Laboratories – A laboratory that provides calibrated equipment for the required test methods and has been accredited by AASHTO.
- Qualified Sampling and Testing Personnel – For soil and asphalt materials, qualified personnel are those who have been certified in the sampling and testing to be performed by the NorthEast Transportation Training & Certification Program (NETTCP) or a person working under the direct supervision of an NETTCP technician certified in the appropriate test. For concrete materials, qualified personnel are those who have been certified in the concrete sampling and testing to be performed by either the American Concrete Institute (ACI) or the NETTCP or a person working under the direct supervision of an ACI or NETTCP certified technician.
- Verification Tests – Samples tested to verify certified properties.

2. SAMPLING AND TESTING PROGRAM

- When the term Municipality or NHDOT is used, it is understood that an authorized firm working on behalf of the NHDOT or the Municipality may perform the action.
- Administration and coordination of the sampling and testing program is the responsibility of the Municipality. All acceptance sampling and testing shall be the responsibility of the municipality managing the construction project.
- The Municipality shall develop a Quality Assurance Program for each project, based on this document, and submit it to NHDOT for documentation prior to the contractor starting construction work. The program shall include the quantity of each item in the project that requires sampling and testing, the number of acceptance tests required, an anticipated schedule for testing, the name and contact information for the party conducting the acceptance tests, and it shall also indicate sources of materials including production plants for ready mix concrete, hot mix asphalt (HMA), precast concrete, and structural steel. See Appendix A for a sample documentation format.
- The municipality must contact NHDOT when work is planned on any item requiring NHDOT independent assurance sampling and testing. Contact the following individuals two weeks in advance of the start of work to establish communication with NHDOT and to provide contact information for the project and the Town:
    - Soils and Concrete Items – Concrete and Soils Supervisor 271 -1656
    - Asphalt Items – Bituminous Supervisor 271-1663
- All acceptance tests shall be performed by qualified sampling and testing personnel at the site using calibrated equipment or at a qualified laboratory.
- It shall be the responsibility of the municipality to request and verify that the sampling and testing personnel are NETTCP, ACI or PCI certified as appropriate for the tests being performed.

- All equipment used for acceptance testing shall have been calibrated within the period prescribed by the respective AASHTO or ASTM method as demonstrated by documentation.
- All acceptance test reports shall include the test locations to allow further testing, if necessary. The required frequency of testing is as shown in the tables in this document.
- The sampling location of the acceptance testing shall be as shown in the tables contained in this document.
- All Independent Assurance sampling and testing shall be the responsibility of NHDOT. The NHDOT conducts a system-based Independent Assurance Program, meaning that each acceptance tester must participate in at least one IA test per calendar year for each material test performed (see tables). The IA test will be done during or prior to the project work. If an acceptance tester has already participated in an Independent Assurance test for a material property in the current calendar year on another project, then the testing program for a project does not have to include an Independent Assurance test for that property. The acceptance tester must be present when Independent Assurance sampling is performed.
- The municipality shall provide a project materials test summary that includes test designation number, the number of tests performed, the name of the acceptance testers, the testers' certification numbers and date of IA test for each tester for each performed test. See Quality Assurance Program Information sheet. This document will become part of the project final records.
- The Independent Assurance personnel shall make a prompt comparison of test results and thereafter investigate, resolve, and document the source of any discrepancies between the results of the assurance and acceptance tests, which are outside the acceptable deviations. See the table of acceptable deviations in Appendix B.
- HMA quantities of less than 500 tons used on roadways will be accepted by field inspection of the work and certification from the producer that it is a NHDOT approved mix design, that it meets the appropriate NHDOT specification, and that it is from a NHDOT certified hot mix asphalt (HMA) plant. No acceptance sampling and testing is required. The municipality is responsible for obtaining the certifications and the certifications for tack coat and crack sealant.
- All HMA quantities used on trails and sidewalks will be accepted by field inspection of the work and certification from the producer that it is a NHDOT approved mix design, that it meets the appropriate NHDOT specification, and that it is from a NHDOT certified hot mix asphalt (HMA) plant. No acceptance sampling and testing is required. The municipality is responsible for obtaining the certifications.
- All structural concrete mix designs shall be approved NHDOT mix designs and the material shall be produced at a NHDOT approved concrete plant and delivered in NHDOT approved mixing trucks.
- All precast concrete items and structures less than or equal to 20' in span along the centerline of roadway, except full depth deck slabs, will be accepted based on the manufacturer's certification that a NHDOT approved mix design was used, that it meets the appropriate NHDOT specification, and that it is from a NHDOT approved plant. The municipality is responsible for obtaining these certifications.

- All items, except natural materials, not in the Materials Frequency of Sampling and Testing Tables in this document will be accepted either:
    - Based on the contractor's or producer's certification that it meets the appropriate NHDOT specification, or
    - Based on inclusion in the NHDOT Qualified Products List & Certificate of Compliance, whichever is required by Specifications.
    - In addition to the certification, plastic pipe shall be supplied by a National Transportation Products Evaluation Program compliant manufacturer.

  It is the responsibility of the municipality to obtain the necessary certifications.
- All natural materials, such as granite, fieldstone, and mulch, not requiring testing or certification in the NHDOT specifications will be accepted based on the municipality's field inspection.
- Contractors are responsible for their own quality control. This includes maintaining production equipment in good working order and all sampling and testing necessary to confirm that all material being produced meets specifications.
- Non-NHDOT laboratories, if used in dispute resolution sampling and testing, shall be accredited in the testing to be performed by the AASHTO Accreditation Program.
- The municipality shall prepare a Materials Certificate and submit it to the NHDOT for each Federal-aid municipally-managed construction project (See Appendix C for sample Certificate).

Frequency of Sampling & Testing – Soil Items Method Specifications

Item	Description	Property	Test Method	Test Location & Frequency	
				Acceptance	Independent Assurance
203	Embankment	Compaction	AASHTO T191, AASHTO T310, or Test Strip	In place 1/2,000 CY	*
209	Granular Backfill, Bridge	Compaction	AASHTO T191, AASHTO T310, or Test Strip	In Place 2/Abutment or Substructure Location	*
		Gradation	AASHTO T27	In Place 1/Structure/Source	None Required
304.1 through 304.6	Select Materials	Compaction	AASHTO T191, AASHTO T310, or Test Strip	In Place 1/1,200 CY	*
		Gradation	AASHTO T27	In Place 1/4,000 CY	*
		Wear	AASHTO T 96, Grading A	1/Source	None Required
306	Reclaimed Stabilized Base	Compaction	Control Strip	In Place 1/2,000 SY	*
		Gradation	AASHTO T27	In Place 1/4,000 SY	*
508	Structural Fill	Compaction	AASHTO T191 or AASHTO T310	In Place 1/Two Lifts/ Location	*
		Gradation	AASHTO T27	In Place 1/Structure/Source	None Required

* Except if completed on another project during the current calendar year, the materials program for a project must include the acceptance tester's participation in one Independent Assurance test for each material test performed.

Frequency of Sampling & Testing
Asphalt Items, Method Specification

Item	Description	Property	Test Method	Test Location and Frequency		
				Acceptance	Independent Assurance	Verification Test**
403	Asphalt Cement HMA > 500 Tons Placed on Roadway*	Relevant AASHTO	AASHTO M320		None Required	Asphalt Plant 1/Project
	HMA > 500 Ton Quantity Placed on Roadway*	Compaction	AASHTO T166	In Place 2 Cores/ Lane Mile	None Required	
		Gradation	AASHTO T30 and T164	At Plant 1/750 Tons	***	
		Asphalt Content	AASHTO T164	At Plant 1/750 Tons	***	
	Emulsified Asphalt	Relevant AASHTO	AASHTO M320		None Required	Asphalt Plant 1/Project
410	Tack Coat	Relevant AASHTO	Certification		None Required	
413	Crack Sealant	Relevant AASHTO	Certification		None Required	

* If the project HMA method specification quantity placed on a roadway is ≤ 500tons, then the AC content and HMA are accepted by certification. If the HMA method specification quantity is not used on a roadway, then the AC content and HMA are accepted by certification.

** The municipality shall take samples and furnish them to the NHDOT laboratory in Concord for testing

*** Except if completed on another project during the current calendar year, the materials program for a project must include the acceptance tester's participation in one Independent Assurance test for each material test performed.

Frequency of Sampling & Testing
Concrete Items, Method Specifications

Item	Description	Property	Test Method	Test Location and Frequency	
				Acceptance	Independent Assurance*
520, 608, 615, 616	Structural Concrete, All Classes	Strength	AASHTO T22 & T23	2/200 CY Min. 2/Placement	From Any Class
		Air Content	AASHTO T152	1/50 CY	From Any Class
		Slump	AASHTO T119	1/50 Cy	From Any Class
All	Non- Stressed Precast ≤ 20' Span	Strength	AASHTO T22 & T23	None Required Accepted by Certification	None Required
		Air Content	AASHTO T152		
		Slump	AASHTO T119		
All	Precast > 20' Span & All Deck Slabs & Prestressed Precast	Strength	AASHTO T22 & 23	2/Member, Bed, or Lot	None Required
		Air Content	AASHTO T152	1/Member, Bed, or Lot	None Required
		Slump	AASHTO T119	1/Member, Bed, or Lot	None Required
	Deck Slabs & Prestressed Precast Items	Rapid Chloride Permeability	AASHTO T277	1/Member, Bed, or Lot	None required

*Except if completed on another project during the current calendar year, the materials program for a project must include the acceptance tester's participation in one Independent Assurance test for each material test performed.

Structural Steel Inspection

Item	Description	Structural Steel Fabrication Inspection
550	Structural Steel	An inspection program shall be developed and implemented that includes all the provisions in the current section 550 of the NHDOT Standard Specifications for Road and Bridge Construction pertaining to shop inspection and non-destructive testing of welds.

Frequency of Sampling & Testing
Asphalt &Concrete Items, QC/QA Specifications

Item	Description	Property	Test Method	Test Location and Frequency		
				Acceptance	Independent Assurance	Verification Test*
403	Asphalt Cement	Relevant AASHTO	AASHTO M320		None Required	Asphalt Plant 1/Project
	QC/QA HMA	Compaction	AASHTO T166	In Place 1 Core/750 Tons	None Required	
		Gradation	AASHTO T30 & T164	In Place 1/750 Tons	**	
		Asphalt Content	AASHTO T164	In Place 1/750 Tons	**	
520	QC/QA Structural Concrete Class A	Strength	AASHTO T22 & T23	Minimum 3 Tests/ Lot, 50 CY Maximum Sublot	None Required	
		Air Content	AASHTO T152		From Any Class	
		Rapid Chloride Permeability	AASHTO T277		None Required	
	QC/QA Structural Concrete Class AA	Strength	AASHTO T22 & T23	Minimum 3 Tests/ Lot, 50 CY Maximum Sublot	From Any Class	
		Air Content	AASHTO T152		From Any Class	
		W/C Ratio	NHDOT Microwave		From Any Class	
		Rapid Chloride Permeability	AASHTO T277		None Required	
	Fine & Coarse Aggregate	Gradation	AASHTO T27	None Required	*	

* The municipality shall take samples and furnish them to the NHDOT laboratory in Concord for testing

** Except if completed on another project during the current calendar year, the materials program for a project must include the acceptance tester's participation in one Independent Assurance test for each material test performed.

Quality Assurance Program Information

At the beginning of project, submit to:

NHDOT Bureau of Materials & Research
P.O. Box 483, 5 Hazen Drive
Concord, NH 03302-0483
ATTN: Chief of Materials Technology
http://www.nh.gov/dot/org/projectdevelopment/materials/index.htm

Project Name & Number:			
Project Description:			
Construction Schedule:			
Contact Information:			
Municipal:		Phone:	
Project Manager:		Phone:	
Testing Firm:		Phone:	
Material Suppliers:			
Redi-mix Concrete:		Phone:	
Precast Concrete:		Phone:	
Hot Mix Asphalt:		Phone:	

Project Materials Test Summary:
Complete during the project and submitted to NHDOT Materials & Research at completion.

	Total Project Quantity	Acceptance Test Method & Required No.		Name of Acceptance Tester	IA Test Dates from This or Other Project
Redi-mix Concrete:					
Precast Concrete:					
Hot Mix Asphalt:					
Select Bases:					

Appendix B
Independent Assurance / Acceptance Test
Acceptable Deviations

Type of Test	% Deviation
Sieve Analysis – All Items #4 (4.75mm) Sieve and Larger	± 5%
Smaller than #4 (4.75mm) Sieve (Sand Portion)	± 4%
Compaction testing – All Items	± 2.5%
Bituminous Mix Evaluation #4 (4.75) Sieve to ¾"	± 3%
Smaller than #4 (4.75mm) Sieve (Total Sample)	± 2%
Asphalt Content	± 0.4%
Portland Cement Concrete	
Air Content	± 0.8%
Water/Cement	0.03

Appendix C

Sample Materials Certification for
Municipally Managed NHDOT Project

Date:
Project Name & Number:

This is to certify that:
The results of the tests used in the acceptance program indicate that the materials incorporated in the construction work, and the construction operations controlled by the sampling and testing, were in conformity with the approved plans and specifications. Exceptions to the above statement are explained in the attachment to this certification.

_____ _____
Duly Authorized Municipal Official Date

_____ _____
Resident Engineer Date

Proposed Accessibility Guidelines for Pedestrian Facilities in the Public Right-of-Way

July 26, 2011

UNITED STATES ACCESS BOARD
A FEDERAL AGENCY COMMITTED TO ACCESSIBLE DESIGN

UNITED STATES ACCESS BOARD
A FEDERAL AGENCY COMMITTED TO ACCESSIBLE DESIGN

1331 F Street, N.W. Suite 1000 • Washington, D.C. 20004-1111
(800) 872-2253 (voice) • (800) 993-2822 (TTY) • Fax: (202) 272-0081
Website: www.access-board.gov • E-mail: ta@access-board.gov

ARCHITECTURAL AND TRANSPORTATION BARRIERS COMPLIANCE BOARD **3**

Preamble **3**

Accessibility Guidelines for Pedestrian Facilities in the Public Right-of-Way 3
Supplementary Information 4
Availability of Proposed Guidelines with Figures 4
Statutory and Regulatory Background 4
Rulemaking History 9
Major Issues 10
Overview of Proposed Guidelines 12
Use of Mandatory Language in Proposed Guidelines 13
Impacts on State and Local Governments 13
Section-by-Section Analysis 17
Other Issues 45
Regulatory Process Matters 46

CHAPTER R1: APPLICATION AND ADMINISTRATION **57**

R101 Purpose 57
R102 Equivalent Facilitation 57
R103 Conventions 57
R104 Referenced Standards 59
R105 Definitions 59

CHAPTER R2: SCOPING REQUIREMENTS **63**

R201 Application 63
R202 Alterations and Elements Added to Existing Facilities 63
R203 Machinery Spaces 65
R204 Pedestrian Access Routes 65
R205 Alternate Pedestrian Access Routes 66
R206 Pedestrian Street Crossings 66
R207 Curb Ramps and Blended Transitions 66
R208 Detectable Warning Surfaces 67
R209 Accessible Pedestrian Signals and Pedestrian Pushbuttons 68
R210 Protruding Objects 68
R211 Signs 69
R212 Street Furniture 70
R213 Transit Stops and Transit Shelters 70
R214 On-Street Parking Spaces 71
R215 Passenger Loading Zones 71
R216 Stairways and Escalators 71
R217 Handrails 71
R218 Doors, Doorways, and Gates 71

CHAPTER R3: TECHNICAL REQUIREMENTS **73**

R301 General 73
R302 Pedestrian Access Routes 73
R303 Alternate Pedestrian Access Routes 78
R304 Curb Ramps and Blended Transitions 78
R305 Detectable Warning Surfaces 83

R306 Pedestrian Street Crossings 89
R307 Accessible Pedestrian Signals and Pedestrian Pushbuttons 91
R308 Transit Stops and Transit Shelters 91
R309 On-Street Parking Spaces 94
R310 Passenger Loading Zones 98

CHAPTER R4: SUPPLEMENTARY TECHNICAL REQUIREMENTS 99

R401 General 99
R402 Protruding Objects 99
R403 Operable Parts 100
R404 Clear Spaces 101
R405 Knee and Toe Clearance 101
R406 Reach Ranges 103
R407 Ramps 104
R408 Stairways 106
R409 Handrails 106
R410 Visual Characters on Signs 110
R411 International Symbol of Accessibility 111

ARCHITECTURAL AND TRANSPORTATION BARRIERS COMPLIANCE BOARD

36 CFR Part 1190

[Docket No. ATBCB 2011-04]

RIN 3014-AA26

Accessibility Guidelines for Pedestrian Facilities in the Public Right-of-Way

AGENCY: Architectural and Transportation Barriers Compliance Board.

ACTION: Notice of Proposed Rulemaking.

SUMMARY: The Architectural and Transportation Barriers Compliance Board is proposing accessibility guidelines for the design, construction, and alteration of pedestrian facilities in the public right-of-way. The guidelines ensure that sidewalks, pedestrian street crossings, pedestrian signals, and other facilities for pedestrian circulation and use constructed or altered in the public right-of-way by state and local governments are readily accessible to and usable by pedestrians with disabilities. When the guidelines are adopted, with or without additions and modifications, as accessibility standards in regulations issued by other federal agencies implementing the Americans with Disabilities Act, Section 504 of the Rehabilitation Act, and the Architectural Barriers Act, compliance with the accessibility standards is mandatory.

DATES: Submit comments by November 23, 2011. Hearings will be held on the proposed guidelines on September 12, 2011 from 9:30 to 11:30 a.m. in Dallas, TX; and on November 9, 2011 from 9:30 to 11:30 a.m. in Washington, DC.

ADDRESSES: Submit comments by any of the following methods:

- Federal eRulemaking Portal: http://www.regulations.gov. Follow the instructions for submitting comments. Regulations.gov ID for this docket is ATBCB-2011-0004.
- E-mail: row@access-board.gov. Include docket number ATBCB 2011-04 in the subject line of the message.
- Fax: 202-272-0081.
- Mail or Hand Delivery/Courier: Office of Technical and Informational Services, Access Board, 1331 F Street, NW, Suite 1000, Washington, DC 20004-1111.

All comments will be posted without change to http://www.regulations.gov, including any personal information provided.

The hearing locations are the Sheraton Dallas (San Antonio A Ballroom), 400 North Olive Street, Dallas, TX 75201; and the Access Board Conference Room, 1331 F Street, NW, Suite 800, Washington, DC 20004.

FOR FURTHER INFORMATION CONTACT: Scott Windley, Office of Technical and Information Services, Architectural and Transportation Barriers Compliance Board, 1331 F Street NW, Suite 1000,

Washington, DC 20004-1111. Telephone (202) 272-0025 (voice) or (202) 272-0028 (TTY). E-mail address row@access-board.gov.

SUPPLEMENTARY INFORMATION:

Availability of Proposed Guidelines with Figures

The proposed guidelines will be codified as an appendix to 36 CFR part 1190. In the past, the Architectural and Transportation Barriers Compliance Board (Access Board) submitted "camera ready" copy (i.e., images) of its guidelines to the Federal Register for the appendices since the guidelines included figures that illustrate the requirements in the guidelines. The appendices were not word searchable when viewed online because they are images. After discussions with the Office of the Federal Register, the Access Board has decided to submit the proposed guidelines as a Word document with only one image, the International Symbol of Accessibility (Figure R411), so the appendix will be word searchable when viewed on-line. A copy of the proposed guidelines with figures is available on the Access Board website at: http://www.access-board.gov/prowac/nprm.htm. Except for the International Symbol of Accessibility (Figure R411), the figures are for illustration purposes only and do not establish requirements. The copy of the proposed guidelines on the Access Board website also sets out advisory sections in shaded boxes, and indents subsections under the main sections.

Introduction

The Access Board is an independent federal agency established by section 502 of the Rehabilitation Act (29 U.S.C. 792).[1] The Access Board is responsible for developing accessibility guidelines for the design, construction, and alteration of facilities to ensure that they are readily accessible to and usable by individuals with disabilities. The Access Board's guidelines play an important part in the implementation of three laws that require newly constructed and altered facilities to be accessible to individuals with disabilities: the Americans with Disabilities Act, Section 504 of the Rehabilitation Act, and the Architectural Barriers Act. As further discussed under the Statutory and Regulatory Background, these laws require other federal agencies to issue regulations which include accessibility standards for the design, construction, and alteration of facilities. The regulations issued by the other federal agencies to implement these laws adopt, with or without additions and modifications, the Access Board's guidelines as accessibility standards. When the Access Board's guidelines are adopted, with or without additions and modifications, as accessibility standards in regulations issued by other federal agencies implementing these laws, compliance with the accessibility standards is mandatory.

Statutory and Regulatory Background

Americans with Disabilities Act

1. The Access Board consists of 13 members appointed by the President from the public, a majority of which are individuals with disabilities, and the heads of 12 federal agencies or their designees whose positions are Executive Level IV or above. The federal agencies are: The Departments of Commerce, Defense, Education, Health and Human Services, Housing and Urban Development, Interior, Justice, Labor, Transportation, and Veterans Affairs; General Services Administration; and United States Postal Service.

The Americans with Disabilities Act (42 U.S.C. 12101 et seq.) is a federal civil rights law that prohibits discrimination against individuals with disabilities. Title II of the Americans with Disabilities Act covers state and local governments.[2] The Department of Justice is responsible for issuing regulations to implement Title II of the Americans with Disabilities Act, except for the public transportation parts.[3] The regulations issued by the Department of Justice include accessibility standards for the design, construction, and alteration of facilities (other than facilities used in the provision of public transportation covered by regulations issued by the Department of Transportation).[4] The Department of Justice's accessibility standards adopt, with additions and modifications, the Access Board's current guidelines, which are discussed below under the Need for Rulemaking.[5] See 28 CFR 35.104 and 35.151.

The Department of Transportation is responsible for issuing regulations to implement the public transportation parts of Title II of the Americans with Disabilities Act.[6] The regulations issued by the Department of Transportation include accessibility standards for the design, construction, and alteration of facilities used in the provision of public transportation covered by the public transportation parts of Title II of the Americans with Disabilities Act. The Department of Transportation's accessibility standards adopt, with additions and modifications, the Access Board's current guidelines, which are discussed below under the Need for Rulemaking. See 49 CFR 37.9 and Appendix A to 49 CFR part 37.

The Department of Justice is responsible for overall enforcement of Title II of the Americans with Disabilities Act. The Department of Justice has designated the Department of Transportation as the federal agency responsible for investigating complaints and conducting compliance reviews "relating to programs, services, and regulatory activities relating to transportation, including highways." See 28 CFR 35.190 (b) (8).

Section 504 of the Rehabilitation Act

2. Other titles of the Americans with Disabilities Act cover employers (Title I), private entities that own, lease, or operate places of public accommodation and commercial facilities (Title III), and telecommunications (Title IV). This preamble focuses on Title II because pedestrian facilities in the public right-of-way are constructed and altered by state and local governments.
3. Title II of the Americans with Disabilities Act contains two subtitles. Subtitle A applies to all state and local government programs, services, and activities. Subtitle B contains two parts. Subtitle B, Part I applies to designated public transportation provided by state and local governments by bus, rail, or other conveyance (other than aircraft or intercity or commuter rail) as a general or special service (including charter service) to the general public on a regular and continuing basis. Subpart B, Part II applies to public transportation provided by the National Railroad Passenger Corporation and commuter authorities by intercity and commuter rail. The Department of Justice is responsible for issuing regulations to implement Subtitle A of Title II, except for matters within the scope of authority of the Department of Transportation under Parts I and II of Subtitle B of Title II. See 42 U.S.C. 12134. The Department of Transportation is responsible for issuing regulations to implement Parts I and II of Subtitle B of Title II. See 42 U.S.C. 12149 and 12164.
4. Subtitle A of Title II of the Americans with Disabilities Act requires that the regulations issued by the Department of Justice include accessibility standards that are "consistent with the minimum guidelines and requirements issued by the Architectural and Transportation Barriers Compliance Board." 42 U.S.C. 12134(c). The accessibility standards issued by the Department of Justice can include additional or modified requirements provided they are consistent with the Access Board's guidelines.

Section 504 of the Rehabilitation Act (29 U.S.C. 794) (hereinafter referred to as "Section 504") prohibits discrimination against individuals with disabilities under any program or activity receiving federal financial assistance. The term "program or activity" includes all the operations of a state or local government entity that receives federal financial assistance directly or indirectly from the federal government. See 29 U.S.C. 794 (b). Each federal agency that provides federal financial assistance is responsible for issuing regulations to implement Section 504 that are consistent with requirements established by the Department of Justice. See Executive Order 12250 in Appendix A to 28 CFR part 41. The Department of Justice requires facilities designed, constructed, or altered by recipients of federal financial assistance to be accessible to individuals with disabilities. See 28 CFR 41.58.

The Department of Transportation provides federal financial assistance to state and local governments for the development of transportation networks, including pedestrian facilities in the public right-of-way.[7] The regulations issued by the Department of Transportation to implement Section 504 require facilities designed, constructed, or altered by recipients of federal financial assistance from the Department to comply with accessibility standards included in the Department's regulations implementing the public transportation parts of Title II of the Americans with Disabilities Act, or the Uniform Federal Accessibility Standards. See 49 CFR §27.3. As discussed above, the accessibility standards included in the Department of Transportation regulations implementing the public transportation parts of Title II of the Americans with Disabilities Act adopt, with additions and modifications, the Access Board's current guidelines, which are discussed below under the Need for Rulemaking. See 49 CFR 37.9 and Appendix A to 49 CFR part 37.

The Department of Transportation is responsible for investigating complaints and conducting compliance reviews under Section 504 relating to recipients of federal financial assistance from the Department. See 49 CFR 27.121 and 27.123.

Architectural Barriers Act

---

5. In September 2010, the Department of Justice issued regulations with revised accessibility standards for Titles II and III of the Americans with Disabilities Act (DOJ 2010 Standards). See 75 FR 56164 (September 15, 2010). Compliance with the DOJ 2010 Standards is required on or after March 15, 2012. State and local governments are permitted to comply with earlier standards (DOJ 1991 Standards without the elevator exception or UFAS) or the DOJ 2010 Standards between September 15, 2010 and March 14, 2012. Additional information on the applicable standards and their effective dates is available on the Department of Justice website at: http://www.ada.gov/revised_effective_dates-2010.htm. The DOJ 2010 Standards are available on the Department of Justice website at: http://www.ada.gov/2010ADAstandards_index.htm.
6. Parts I and II of Subtitle B of Title II of the Americans with Disabilities Act require that the regulations issued by the Department of Transportation include accessibility standards that are "consistent with the minimum guidelines and requirements issued by the Architectural and Transportation Barriers Compliance Board." 42 U.S.C. 12149 (b) and 12163. The accessibility standards issued by the Department of Transportation can include additional or modified requirements provided they are consistent with the Access Board's guidelines.
7. See Department of Transportation "Policy Statement on Bicycle and Pedestrian Accommodation Regulations and Recommendations" at: http://www.dot.gov/affairs/2010/bicycle-ped.html.

The Architectural Barriers Act (42 U.S.C. 4151 et seq.) requires certain facilities financed with federal funds to be accessible to individuals with disabilities. The Architectural Barriers Act covers facilities financed in whole or part by a federal grant or loan where the federal agency that provides the grant or loan is authorized to issue standards for the design, construction, or alteration of the facilities.[8] See 42 U.S.C. 4151 (3). The General Services Administration is required to issue accessibility standards for facilities covered by the Architectural Barriers Act.[9] See 42 U.S.C. 4156. The accessibility standards issued by the General Services Administration adopt, without any additions or modifications, the Access Board's current guidelines, which are discussed below under the Need for Rulemaking. See 41 CFR 102-76.65.

The Access Board is responsible for enforcing the Architectural Barriers Act. See 29 U.S.C 792 (b) (1) and (e).

Need for Rulemaking

This section discusses the Congressional findings in the Americans with Disabilities Act that establish the need for accessibility guidelines, the Access Board's current accessibility guidelines, and why the Access Board is proposing to issue accessibility guidelines for pedestrian facilities in the public right-of-way.

Congressional Findings of Discrimination

The Americans with Disabilities Act was enacted in 1990 by overwhelming bipartisan majorities in the House of Representatives (377 – 28) and in the Senate (91 – 6).[10] Congress compiled an extensive record of the discrimination experienced by individuals with disabilities in critical areas such as employment, public accommodations, state and local government services, and transportation. Congress found that "despite some improvements such forms of discrimination against individuals with disabilities continue to be a serious and pervasive social problem." 42 U.S.C. 12101 (a) (2). Among the forms of discrimination that Congress found to be a continuing problem are "the discriminatory effects of architectural, transportation, and communication barriers." 42 U.S.C. 12101 (a) (5). Congress found that "the continuing existence of unfair and unnecessary discrimination and prejudice denies people with disabilities the opportunity to compete on an equal basis and to pursue those opportunities for which our free society is justifiably famous, and costs the United States billions of dollars in unnecessary expenses resulting from dependency and nonproductivity." 42 U.S.C. 12101 (a) (9). Congress declared that "the Nation's proper goals regarding individuals with disabilities are to ensure equality of opportunity, full

8. The Architectural Barriers Act also covers facilities constructed, altered, or leased by federal agencies; and facilities constructed or altered by the Washington Metropolitan Area Transit Authority. See 42 U.S.C. 4151 (1), (2), and (4).
9. The accessibility standards issued by the General Services Administration apply to all facilities covered by the Architectural Barriers Act, except for postal, military, and residential facilities. The United States Postal Service is responsible for issuing accessibility standards for postal facilities; the Department of Defense is responsible for issuing accessibility standards for military facilities; and the Department of Housing and Urban Development is responsible for issuing accessibility standards for residential facilities. See 42 U.S.C. 4153, 4154, and 4154a.
10. 101 Cong. Rec. H4629 and 4630 (July 12, 1990); 101 Cong. Rec. S9695 (July 13, 1990).

participation, independent living, and economic self-sufficiency for such individuals." 42 U.S.C. 12101 (a) (8).

The purpose of the Americans with Disabilities Act is "to provide a clear and comprehensive national mandate for the elimination of discrimination against individuals with disabilities" and "to provide clear, strong, and consistent, enforceable standards addressing discrimination against individuals with disabilities." 42 U.S.C. 12101 (b) (1) and (2). Congress directed the Access Board to supplement the accessibility guidelines developed earlier for the Architectural Barriers Act to include "additional requirements, consistent with this Act, to ensure that buildings, facilities, rail passenger cars, and vehicles are accessible in terms of architecture and design, transportation, and communication, to individuals with disabilities." 42 U.S.C. 12204 (b).

Current Guidelines Developed Primarily for Buildings and Facilities on Sites

The Access Board's current accessibility guidelines were issued in 2004 and are known as the Americans with Disabilities Act and Architectural Barriers Act Accessibility Guidelines (hereinafter referred to as "2004 ADA and ABA Accessibility Guidelines").[11] 69 FR 44083 (July 23, 2004). The 2004 ADA and ABA Accessibility Guidelines revised and updated the Americans with Disabilities Act Accessibility Guidelines, which were issued by the Access Board in 1991 (hereinafter referred to as "1991 ADAAG"). 56 FR 35408 (July 26, 1991). The requirements in the 1991 ADAAG and 2004 ADA and ABA Accessibility Guidelines were developed primarily for buildings and facilities on sites.[12] Some of the requirements can be readily applied to pedestrian facilities in the public right-of-way. However, other requirements need to be adapted for pedestrian facilities in the public right-of-way.

---

11. The 2004 ADA and ABA Accessibility Guidelines are codified in 36 CFR part 1191and consist of six appendices:

- Appendix A is the Table of Contents to the guidelines;
- Appendix B contains ADA Chapters 1 and 2, which include application and scoping requirements for the design, construction, and alteration of facilities covered by the Americans with Disabilities Act;
- Appendix C contains ABA Chapters 1 and 2, which include application and scoping requirements for the design, construction, and alteration of facilities covered by the Architectural Barriers Act;
- Appendix D contains Chapters 3 through 10, which include common technical requirements for the design, construction, and alteration of facilities covered by the Americans with Disabilities Act or the Architectural Barriers Act;
- Appendix E contains the index of terms and list of figures included in the guidelines; and
- Appendix F contains additions and modifications to the guidelines issued by the Department of Transportation.

The DOJ 2010 Standards and the Department of Transportation standards for transportation facilities used in the provision of transportation services covered by the transportation parts of Title II of the ADA and facilities covered by Section 504 adopt Appendices B and D, with additions and modifications. The General Services Administration standards for facilities covered by the Architectural Barriers Act adopt Appendices C and D, without additions and modifications.

12. The term "site" is defined in the 1991 ADAAG (see 3.5) and 2004 ADA and ABA Accessibility Guidelines (see 106.5 and F106.5) as a "parcel of land bounded by a property line or a designated portion of a public right-of-way."

Proposed Guidelines Developed Specifically for Pedestrian Facilities in the Public Right-of-Way

The proposed guidelines are developed specifically for pedestrian facilities in the public right-of-way and address conditions and constraints that exist in the public right-of-way. As discussed below under the Major Issues, the requirements in the proposed guidelines make allowances for typical roadway geometry and permit flexibility in alterations to existing facilities where existing physical constraints make it impractical to fully comply with new construction requirements. The proposed guidelines also include requirements for elements and facilities that exist only in the public right-of-way such as pedestrian signals and roundabouts.

Rulemaking History

The Access Board began developing accessibility guidelines for pedestrian facilities in the public right-of-way shortly after the Americans with Disabilities Act was enacted in 1990. Proposed guidelines for state and local government facilities, including pedestrian facilities in the public right-of-way, were initially issued in 1992. 57 FR 60612 (December 21, 1992). Interim guidelines were issued in 1994. 59 FR 31676 (June 20, 1994). Final guidelines were issued in 1998, but did not include requirements for pedestrian facilities in the public right-of-way because comments submitted on the proposed and interim guidelines demonstrated a need for additional research, as well as education and outreach. 63 FR 2000 (January 13, 1998).

The Access Board subsequently sponsored research on accessible pedestrian signals and pedestrian pushbuttons, detectable warning surfaces, and pedestrian facilities at roundabouts.[13] The Access Board also produced a series of videos, a design guide, and an accessibility checklist for pedestrian facilities in the public right-of-way, and conducted training programs around the country. The Access Board coordinated its work with organizations representing state and local government transportation officials and other transportation industry professionals, including the American Association of State Highway and Transportation Officials, Institute of Transportation Engineers, National Committee on Uniform Traffic Control Devices, and Transportation Research Board.

The Access Board established a federal advisory committee in 1999 to recommend accessibility guidelines for pedestrian facilities in the public right-of-way. The advisory committee included representatives of state and local governments, the transportation industry, disability organizations, and other interested groups.[14] The advisory committee provided significant sources of expertise and produced consensus recommendations for accessibility guidelines for pedestrian facilities in the public right-of-way. The advisory committee presented its recommendations, “Building a True Community: Final Report of the Public Rights-of-Way Access Advisory Committee”, to the Access Board in 2001.[15]

The Access Board developed draft accessibility guidelines for pedestrian facilities in the public right-of-way based on the advisory committee’s recommendations, and made the draft guidelines available for public review and comment in 2002.[16] 67 FR 41206 (June 17, 2002). The Access Board revised the

13. The reports on the research sponsored by the Access Board and technical assistance materials on accessible design of pedestrian facilities in the public right-of-way are available on the Access Board website at: http://www.access-board.gov/prowac/index.htm.

draft guidelines in 2005 and made the revised draft guidelines available for public review to facilitate the gathering of data for a regulatory assessment of the potential costs and benefits of the guidelines. 70 FR 70734 (November 23, 2005). The Access Board entered into an interagency agreement with the Volpe National Transportation Systems Center (Volpe Center) to gather data and prepare cost estimates for the regulatory assessment.[17]

Major Issues

Transportation officials who commented on the 2002 draft guidelines raised some major issues that are addressed below.

Alterations to Existing Facilities

The draft guidelines required alterations to existing facilities to comply with the requirements for new construction to the maximum extent feasible. Most of the improvements in the public right-of-way involve alterations to existing facilities. Transportation officials noted that the meaning of the term "to the maximum extent feasible" was not clear and wanted additional guidance on how to apply the guidelines when existing facilities are altered.

The proposed guidelines clarify that where elements, spaces, or facilities are altered, each altered element, space, or facility within the scope of the project must comply with the applicable requirements for new construction (see R202.3). The phrase "within the scope of the project" is intended to focus on whether the alteration project presents an opportunity to design the altered element, space, or facility in an accessible manner. It is not intended for additional work to be done outside the scope of the project. For example, if an alteration project involves only installing pedestrian signals at existing intersections and there are no detectable warning surfaces on the curb ramps at the intersections, the proposed

14. The following organizations were members of the advisory committee: AARP, America Walks, American Association of State Highway and Transportation Officials, American Council of the Blind, American Institute of Architects, American Public Transit Association, American Public Works Association, Association for Education and Rehabilitation of the Blind and Visually Impaired, Bicycle Federation of America, Californians for Disability Rights, Canadian Standards Association (Technical Committee on Barrier-Free Design), City of Birmingham (Department of Planning, Engineering and Permits), Council of Citizens with Low Vision International, Disability and Business Technical Assistance Centers, Disability Rights Education and Defense Fund, Federal Highway Administration, Hawaii Commission on Persons with Disabilities, Hawaii Department of Transportation, Institute of Traffic Engineers, Los Angeles Department of Public Works (Bureau of Street Services), Massachusetts Architectural Access Board, Municipality of Anchorage, National Center for Bicycling and Walking, National Council on Independent Living, National Federation of the Blind, New York State Department of Transportation, Paralyzed Veterans of America, Portland Office of Transportation, San Francisco Mayor's Office on Disability, State of Alaska, TASH, Texas Department of Transportation, and The Seeing Eye.
15. The advisory committee report is available on the Access Board website at: http://www.access-board.gov/prowac/commrept/index.htm.
16. The 2002 and 2005 draft guidelines and comments submitted on the 2002 draft guidelines are available on the Access Board website at: http://www.access-board.gov/prowac/index.htm.
17. Volpe Center, "Cost Analysis of Public Rights-of-Way Accessibility Guidelines" (November 29, 2010). The document is available in the rulemaking docket (ATBCB-2011-0004) at: http://www.regulations.gov.

guidelines would require accessible pedestrian signals and pedestrian pushbuttons to be provided at the intersections because they are within the scope of the project, but would not require detectable warning surfaces to be provided on the curb ramps because they are not within the scope of the project. The proposed guidelines also clarify that where elements are altered or added to existing facilities but the pedestrian circulation path to the altered or added elements is not altered, the pedestrian circulation path is not required to comply with the proposed requirements for pedestrian access routes (see R202.1). For example, if a new bench is installed on a sidewalk that has a cross slope exceeding 2 percent, the sidewalk is not required to be altered to reduce the cross slope because the bench is installed on the sidewalk.

In addition, the proposed guidelines recognize that it is not always possible for altered elements, spaces, or facilities to fully comply with new construction requirements because of existing physical constraints. Where existing physical constraints make it impracticable for altered elements, spaces, or facilities to fully comply with the requirements for new construction, compliance is required to the extent practicable within the scope of the project (see R202.3.1). Existing physical constraints include, but are not limited to, underlying terrain, right-of-way availability, underground structures, adjacent developed facilities, drainage, or the presence of a notable natural or historic feature. The proposed guidelines permit flexibility in alterations to existing facilities where needed.

Existing Facilities That Are Not Altered

Transportation officials expressed concern about application of the draft guidelines to existing facilities that are not altered. The proposed guidelines clarify that the guidelines do not address existing facilities unless they are included within the scope of an alteration undertaken at the discretion of a covered entity (see R101.2).

The Department of Justice regulations implementing Title II of the Americans with Disabilities Act contain requirements for state and local governments regarding program accessibility and existing facilities. See 28 CFR 35.150. The Department of Transportation regulations implementing Section 504 also contain requirements for recipients of federal financial assistance from the Department regarding compliance planning. See 49 CFR 27.11 (c). The Access Board acknowledges that transportation officials are concerned about their obligations under the Title II of the Americans with Disabilities Act and Section 504 for existing facilities that are not altered, but the Access Board does not have the authority to address the application of the proposed guidelines to existing facilities that are not altered. When the Department of Justice and Department of Transportation conduct rulemaking to include accessibility standards for pedestrian facilities in the public right-of-way in regulations implementing Title II of the Americans with Disabilities Act and Section 504, they will address the application of the accessibility standards to existing facilities that are not altered. Comments concerning existing facilities that are not altered should be directed to the Department of Justice and Department of Transportation when they conduct rulemaking to include accessibility standards for pedestrian facilities in the public right-of-way in regulations implementing Title II of the Americans with Disabilities Act and Section 504.

Allowances for Typical Roadway Geometry

The 1991 ADAAG and 2004 ADA and ABA Accessibility Guidelines specify a maximum running slope of 5 percent and maximum cross slope of 2 percent for walking surfaces on accessible routes. The draft

guidelines adapted these requirements for pedestrian access routes in the public right-of-way and made an allowance for typical roadway geometry by permitting the grade of pedestrian access routes within sidewalks to equal the general grade established for the adjacent street or highway. The draft guidelines also permitted the cross slope of pedestrian access routes within midblock pedestrian street crossings and of curb ramps at midblock pedestrian street crossings to equal the street or highway grade.

Transportation officials recommended that additional allowances be made for typical roadway geometry. The proposed guidelines include the following allowances for typical roadway geometry:

- The grade of pedestrian access routes within sidewalks is permitted to equal the general grade established for the adjacent street or highway (see R302.5).
- A maximum cross slope of 5 percent is permitted for pedestrian access routes within pedestrian street crossings without yield or stop control where vehicles can proceed through the intersection without slowing or stopping (see R302.6.1).
- The cross slope of pedestrian access routes within midblock pedestrian street crossings is permitted to equal the street or highway grade (see R302.6.2).
- The cross slope of curb ramps, blended transitions, and turning spaces at pedestrian street crossings without yield or stop control where vehicles can proceed through the intersection without slowing or stopping, and at midblock pedestrian street crossings are permitted to equal the street or highway grade (see R304.5.3).
- Clear spaces required at accessible pedestrian signals and pedestrian pushbuttons and at other accessible elements are permitted to have a running slope consistent with the grade of the adjacent pedestrian access route (see R404.2).

A maximum grade of 5 percent and maximum cross slope of 2 percent are required otherwise for pedestrian access routes within sidewalks and pedestrian street crossings (see R302.5 and R302.6).

Overview of Proposed Guidelines

The proposed guidelines apply to pedestrian facilities in the public right-of-way. The proposed guidelines define the public right-of-way to mean “public land or property, usually in interconnected corridors, that is acquired for or dedicated to transportation purposes” (see R105.5). The proposed guidelines ensure that the following facilities for pedestrian circulation and use located in the public right-of-way are readily accessible to and usable by pedestrians with disabilities:

- Sidewalks, pedestrian overpasses and underpasses, and other pedestrian circulation paths, including requirements for pedestrian access routes, alternate pedestrian access routes when pedestrian circulation paths are temporarily closed, and protruding objects along or overhanging pedestrian circulation paths;
- Pedestrian street crossings, medians, and pedestrian refuge islands, including requirements for curb ramps or blended transitions, and detectable warning surfaces;
- Pedestrian street crossings at roundabouts, including requirements for detectable edge treatments where pedestrian crossing is not intended, and pedestrian activated signals at multi-lane pedestrian street crossings;
- Pedestrian street crossings at multi-lane channelized turn lanes at roundabouts and at other signalized intersections, including requirements for pedestrian activated signals;

- Pedestrian signals, including requirements for accessible pedestrian signals and pedestrian pushbuttons;
- Transit stops and transit shelters for buses and light rail vehicles, including requirements for boarding and alighting areas at sidewalk or street level, boarding platforms, and route signs;
- Pedestrian at-grade rail crossings, including requirements for flangeway gaps;
- On-street parking that is marked or metered, and passenger loading zones;
- Pedestrian signs, including requirements for visible characters on signs and alternative requirements for audible sign systems and other technologies;
- Street furniture for pedestrian use, including drinking fountains, public toilet facilities, tables, counters, and benches; and
- Ramps, stairways, escalators, handrails, doors, doorways, and gates.

Use of Mandatory Language in Proposed Guidelines

The proposed guidelines use the mandatory language “shall” and “requirement” because the guidelines are intended to be adopted, with or without additions and modifications, as accessibility standards in regulations issued by other federal agencies implementing Title II of the Americans with Disabilities Act, Section 504, and the Architectural Barriers Act. In this regard, the proposed guidelines are analogous to model codes. Model codes use mandatory language but compliance with model codes is not mandatory until they are adopted by a state or local government. When the Access Board’s guidelines are adopted, with or without additions and modifications, as accessibility standards in regulations issued by other federal agencies implementing Title II of the Americans with Disabilities Act, Section 504, and the Architectural Barriers Act, compliance with the accessibility standards is mandatory. The other federal agencies will conduct separate rulemakings to include accessibility standards for pedestrian facilities in the public right-of-way in regulations implementing Title II of the Americans with Disabilities Act, Section 504, and the Architectural Barriers Act. The other federal agencies will establish the effective dates for compliance with the accessibility standards when they complete their rulemakings. The other federal agencies may permit use of the proposed guidelines as best practices pending the completion of their rulemakings. However, the proposed guidelines are not legally enforceable until adopted, with or without additions and modifications, as accessibility standards by other federal agencies in regulations implementing Title II of the Americans with Disabilities Act, Section 504, and the Architectural Barriers Act.

Impacts on State and Local Governments

When the proposed guidelines are adopted, with or without additions and modifications, as accessibility standards by other federal agencies in the regulations implementing Title II of the Americans with Disabilities Act, Section 504, and the Architectural Barriers Act, the accessibility standards will apply to units of state and local government that construct streets and highways.[18] For ease of reference, these

18. Private entities that design, construct, or alter places of public accommodation or commercial facilities on sites are required to comply with accessibility standards included in regulations issued by the Department of Justice to implement Title III of the Americans with Disabilities Act. See 28 CFR 36.401 through 36.406. State or local laws may require sites with frontage on the public right-of-way or frontage that will revert to the public right-of-way to make frontage improvements in accordance with state or local standards which contain accessibility requirements that are similar to the proposed guidelines.

state and local governmental units are referred to as "state and local transportation departments" in this preamble but may go by different names (e.g., public works departments, or highway or streets departments) in their respective jurisdictions. State and local transportation departments may be required to comply with three accessibility standards. For example, a state or local transportation department that finances the design, construction, or alteration of a pedestrian facility in the public right-of-way with a federal grant or loan from the Department of Transportation would be required to comply with the accessibility standards issued by the Department of Justice in regulations implementing Title II of the Americans with Disabilities Act, the accessibility standards issued by the Department of Transportation in regulations implementing Section 504, and the accessibility standards issued by the General Services Administration in regulations implementing the Architectural Barriers Act. All three accessibility standards would be basically uniform because they adopt the proposed guidelines, but may vary to the extent that Department of Justice, Department of Transportation, and General Services Administration include additions or modifications to the proposed guidelines in their accessibility standards.

The Access Board prepared a regulatory assessment of the potential costs and benefits of the proposed guidelines. The regulatory assessment is available in the regulatory docket at http://www.regulations.gov and on the Access Board website at: http://www.access-board.gov/prowac/index.htm. The proposed guidelines are compared to a baseline to assess their potential costs and benefits. The baseline is how state and local transportation departments would design and construct pedestrian facilities in the public right-of-way in the absence of the proposed guidelines. All state transportation departments maintain design manuals and standard drawings for improvements in the public right-of-way.[19] Most local transportation department also maintain design manuals and standard drawings for improvements in the public right-of-way that are consistent with the design manuals and standard drawings maintained by their state transportation departments. State and local transportation departments use publications issued by the American Association of State and Highway Transportation Officials (AASHTO) in their design manuals and standard drawings, including the "Policy on Geometric Design of Highways and Streets" (2004) (commonly referred to as the "AASHTO Green Book") and the "Guide for the Planning, Design, and Operation of Pedestrian Facilities" (2004) which incorporate accessibility in the design of sidewalks and other pedestrian facilities.[20] The Federal Highway Administration as part of its stewardship and oversight responsibilities has also worked with state transportation departments to incorporate accessibility in their design manuals and standards drawings. The Federal Highway Administration has issued guidance that the accessibility standards in the Department of Justice regulations implementing Title II of the Americans with Disabilities Act and the Department of Transportation regulations implementing Section 504 "are to be used to the extent feasible" for the design of pedestrian facilities in the public right-of-way until new accessibility standards

19. Links to the design manuals and standard drawings maintained by state transportation departments are available on the Federal Highway Administration website at: http://www.fhwa.dot.gov/programadmin/statemanuals.cfm and http://www.fhwa.dot.gov/programadmin/statestandards.cfm.

20. The AASHTO "Policy on Geometric Design of Highways and Streets" and "Guide for the Planning, Design, and Operation of Pedestrian Facilities" incorporate accessibility in the design of sidewalks, including minimum clear width, passing spaces, grade, cross slope, protruding objects, and surface treatments; curb ramps, including detectable warning surfaces; pedestrian overpasses and underpasses; and transit stops and transit shelters.

are adopted for these facilities.[21] The Federal Highway Administration has also issued guidance that the 2005 draft of the proposed guidelines for pedestrian facilities in the public right-of-way "are the currently recommended best practices, and can be considered the state of the practice that could be followed for areas not fully addressed" in the existing accessibility standards.[22]

In the absence of the proposed guidelines, the regulatory assessment assumes that state and local transportation departments will use the revised accessibility standards in the Department of Justice regulations implementing Title II of the Americans with Disabilities Act (hereinafter referred to as "DOJ 2010 Standards") to the extent feasible when designing, constructing, or altering pedestrian facilities in the public right-of-way, consistent with the guidance issued by the Federal Highway Administration, as well as other applicable standards and industry practices.[23] An analysis of the proposed guidelines compared to the DOJ 2010 Standards, other applicable standards, and industry practices is included in the appendix to the regulatory assessment. The analysis consists of three tables.

Table 1. Proposed Guidelines Contain Same Requirements as in DOJ 2010 Standards

Table 1 analyzes requirements in the proposed guidelines that are the same as requirements in the DOJ 2010 Standards.[24] The requirements in the proposed guidelines in Table 1 will have no impacts on state and local transportation departments compared to the requirements in the DOJ 2010 Standards because the requirements are the same.

Table 2. Proposed Guidelines Adapt Requirements in DOJ 2010 Standards

Table 2 analyzes requirements in the proposed guidelines that adapt requirements in the DOJ 2010 Standards to allow for conditions and constraints in the public right-of-way.[25] The requirements in the proposed guidelines in Table 2 do not establish greater requirements for accessibility in the public right-

21. See Federal Highway Administration, Office of Program Administration, "Pedestrians and Accessible Design" at: http://www.fhwa.dot.gov/programadmin/pedestrians.cfm. When the guidance was issued, the applicable accessibility standards in the Department of Justice regulations implementing Title II of the Americans with Disabilities Act and the Department of Transportation regulations implementing Section 504 adopted the 1991 ADAAG and permitted the Uniform Federal Accessibility Standards to be used.
22. See Federal Highway Administration, "Public Rights-of-Way Access Advisory" (January 23, 2006) at: http://www.fhwa.dot.gov/environment/bikeped/prwaa.htm.
23. See footnote 5 regarding the DOJ 2010 standards and effective dates.
24. The requirements analyzed in Table 1include: drinking fountains, public toilet facilities, tables, counters, passenger loading zones, ramps, stairways, handrails, doors, doorways, gates, operable parts, clear spaces, knee and toe clearance, and reach ranges.
25. The requirements analyzed in Table 2 include: sidewalks and other pedestrian circulation paths, pedestrian street crossings, pedestrian overpasses and underpasses, pedestrian at-grade rail crossings, curb ramps and blended transitions, protruding objects, transit stops and transit shelters used by buses and light rail vehicles, on-street parking, and escalators. The requirements for transit stops and transit shelters used by buses and light vehicles are compared to the accessibility standards in the Department of Transportation regulations implementing the public transportation parts of Title II of the Americans with Disabilities Act.

of-way than the requirements in the DOJ 2010 Standards and industry practices. Some of the requirements in the proposed guidelines in Table 2 establish lesser requirements for accessibility in the public right-of-way than the requirements in the DOJ 2010 Standards. For example, where the pedestrian access route in a sidewalk is contained within the street or highway right-of-way, the grade of the pedestrian access route is permitted to equal the general grade established for the adjacent street or highway to allow for typical roadway geometry instead of the running slope requirements for accessible routes on sites. The requirements in the proposed guidelines in Table 2 will have no impacts on state and local transportation departments compared to the requirements in the DOJ 2010 Standards and industry practices, except for the 2 percent maximum cross slope requirement for pedestrian access routes contained within pedestrian street crossings with stop or yield control where vehicles slow or stop before proceeding through the intersection (see R204.3 and R302.6). This requirement will have more than minimal impacts on the design and construction of new tabled intersections in hilly urban areas that contain pedestrian street crossings with stop or yield control. The impacts are analyzed in the regulatory assessment and discussed below under Cross Slope (R302.6) in the Section-by-Section Analysis.

Table 3. Proposed Guidelines Contain Requirements Not in DOJ 2010 Standards

Table 3 analyzes requirements in the proposed guidelines for which there are no corresponding requirements in the DOJ 2010 Standards.[26] The requirements in the proposed guidelines in Table 3 are compared to other applicable accessibility standards and the 2009 edition of Manual on Uniform Traffic Control Devices for Streets and Highways (MUTCD). Where the requirements in the proposed guidelines in Table 3 are the same as the requirements in other applicable accessibility standards or the MUTCD, the requirements will have no impacts on state and local transportation departments. Where a requirement in the proposed guidelines in Table 3 differs from a corresponding requirement in other applicable accessibility standards or there is no corresponding requirement in other applicable accessibility standards, the analysis used the following factors to identify whether the requirement will have more than minimal impacts on state and local transportation departments:

- Whether the requirement can be easily incorporated into the design of the element or facility?
- Whether the requirement adds features to the element or facility?
- Whether the requirement reduces space needed for other purposes?
- What are the additional costs due to the requirement compared to the total design and construction costs for the element or facility?

A requirement that can be easily incorporated into the design of an element or facility, and does not add features to the element or facility or reduce space needed for other purposes will have minimal impacts on state and local transportation departments. A requirement that cannot be easily incorporated into the design of an element or facility, adds features to the element or facility, or reduces space needed for other purposes and that results in additional costs compared to the total design and construction costs of

26. The requirements analyzed in Table 3 include: alternate pedestrian access routes, pedestrian signal phase timing, accessible pedestrian signals and pedestrian pushbuttons, pedestrian street crossings at roundabouts, detectable warning surfaces on curb ramps and blended transitions at pedestrian street crossings, detectable warning surfaces on pedestrian at-grade rail crossings not located within a street or highway, pedestrian signs, and benches.

the element or facility which are not negligible (i.e., are worth considering) will have more than minimal impacts on state and local transportation departments.

The analysis identified three requirements in the proposed guidelines in Table 3 that will have more than minimal impacts on state and local transportation departments:

- Detectable warning surfaces on curb ramps and blended transitions at pedestrian street crossings (see R208.1 and R305);
- Accessible pedestrian signals and pedestrian pushbuttons (see R209); and
- Pedestrian activated signals at roundabout intersections with multi-lane pedestrian street crossings (see R206 and R306.3.2).

The impacts of these requirements are analyzed in the regulatory assessment and are discussed below under the relevant requirements in the Section-by-Section Analysis.

Question 1. Comments are requested on whether other requirements in the proposed guidelines will have more than minimal impacts on state and local transportation departments, in addition to the requirements identified in Tables 2 and 3. Comments should:

- Identify the requirement by section number or other information that identifies the specific requirement;
- Explain why the requirement will have more than minimal impacts using the factors described above or other appropriate factors; and
- Provide estimates of the additional costs due to the requirement compared to the total design and construction costs for the element or facility.

Question 2. Comments are requested on whether the requirements in the proposed guidelines have any unintended positive or negative consequences.

Question 3. Comments are requested on alternative regulatory approaches for achieving the objectives of the Americans with Disabilities Act, Section 504, and Architectural Barriers Act to eliminate the discriminatory effects of architectural, transportation, and communication barriers in the design and construction of pedestrian facilities in the public right-of-way.

Section-by-Section Analysis

The proposed guidelines consist of four chapters. Chapter R1 addresses the application and administration of the proposed guidelines. Chapter R2 contains scoping requirements. Chapter R3 contains technical requirements. Chapter R4 contains supplementary technical requirements, which are the same as in the 2004 ADA and ABA Accessibility Guidelines with a few exceptions. The sections in each chapter are discussed below. Sections marked as “advisory” contain advisory information related to the preceding section. Advisory sections do not establish mandatory requirements. Some advisory sections reference related mandatory requirements to alert readers about those requirements.

The Access Board is committed to writing guidelines that are clear, concise, and easy to understand so that persons who use the guidelines know what is required. If any of the proposed guidelines are

ambiguous or not clear, point out the problematic language in your comments so it can be improved in the final guidelines.

Chapter R1: Application and Administration

R101 Purpose

The proposed guidelines contain scoping and technical requirements to ensure that facilities for pedestrian circulation and use located in the public right-of-way are readily accessible to and usable by pedestrians with disabilities. When the guidelines are adopted, with or without additions and modifications, as accessibility standards in regulations issued by other federal agencies implementing Title II of the Americans with Disabilities Act, Section 504, and the Architectural Barriers Act, compliance with the accessibility standards is mandatory.

The proposed guidelines do not address existing facilities unless they are included within the scope of an alteration to an existing facility undertaken at the discretion of a covered entity. The Department of Justice regulations implementing Title II of the Americans with Disabilities Act contain requirements for state and local governments regarding program accessibility and existing facilities. See 28 CFR 35.150. The Department of Transportation regulations implementing Section 504 also contain requirements for recipients of federal financial assistance from the Department regarding compliance planning. See 49 CFR 27.11 (c). As discussed above under the Major Issues, transportation officials who commented on the 2002 draft guidelines expressed concern about existing facilities that are not altered. When the Department of Justice and Department of Transportation conduct rulemaking to include accessibility standards for pedestrian facilities in the public right-of-way in regulations implementing Title II of the Americans with Disabilities Act and Section 504, they will address the application of the accessibility standards to existing facilities that are not altered. Comments concerning existing facilities that are not altered should be directed to the Department of Justice and Department of Transportation when they conduct rulemaking to include accessibility standards for pedestrian facilities in the public right-of-way in regulations implementing Title II of the Americans with Disabilities Act and Section 504.

R102 Equivalent Facilitation

The use of alternative designs, products, or technologies that result in substantially equivalent or greater accessibility and usability than the proposed guidelines is permitted.

R103 Conventions

Conventional industry tolerances apply where dimensions are not stated as a range. Where the required number of accessible facilities or elements is based on ratios or percentages and remainders or fractions result, the next greater whole number is required. Where the required size or dimension of a facility or element is based on ratios or percentages, rounding down for values less than one half is permitted. Measurements are stated in metric and U.S. customary units, and each system of measurement is to be used independently of the other.

R104 Referenced Standards

The proposed guidelines incorporate by reference certain standards in the 2009 edition of the Manual on Uniform Traffic Control Devices for Streets and Highways (MUTCD). The referenced MUTCD standards are discussed below under the relevant requirements regarding the provision of alternate pedestrian access routes when a pedestrian circulation path is temporarily closed, the provision of accessible pedestrian signals and pedestrian pushbuttons, and pedestrian signal phase timing. The MUTCD is available on the Federal Highway Administration website at: http://mutcd.fhwa.dot.gov.

R105 Definitions

The proposed guidelines incorporate the MUTCD definitions for the following terms: highway, intersection, island, median, pedestrian, roundabout, sidewalk, splitter island, and street. The proposed guidelines define the following terms: accessible, alteration, blended transition, cross slope, curb line, curb ramp, element, facility, grade break, operable part, pedestrian access route, pedestrian circulation path, public right-of-way, qualified historic facility, running slope, and vertical surface discontinuities. These definitions are discussed in the sections where the terms are used. Collegiate dictionaries are used to determine the meaning of terms that are not defined in the proposed guidelines, referenced MUTCD standards, or regulations issued by federal agencies that adopt the proposed guidelines as accessibility standards. Singular and plural words, terms, and phrases are used interchangeably.

Chapter R2: Scoping Requirements

Scoping requirements specify what pedestrian facilities must comply with the proposed guidelines. Some of the scoping requirements are triggered where certain pedestrian facilities are provided such as pedestrian signals (see R209), street furniture (see R212), transit stops and transit shelters (see R213), on-street parking (see R214), and passenger loading zones (see R215). The scoping requirements reference the technical requirements that each pedestrian facility must comply with in order to be considered accessible. The technical requirements are discussed in Chapters R3 and R4.

R201 Application

The proposed guidelines apply to newly constructed facilities, altered portions of existing facilities, and elements added to existing facilities for pedestrian circulation and use located in the public right-of-way. The proposed guidelines apply to both permanent and temporary facilities in the public right-of-way. An advisory section provides examples of temporary facilities in the public right-of-way that are covered by the scoping requirements (e.g., temporary pedestrian circulation routes around work zones and portable public toilets).

Buildings and structures in the public right-of-way that are not covered by the proposed guidelines must comply with the applicable requirements in the 2004 ADA and ABA Accessibility Guidelines. An advisory section provides examples of buildings and structures in the public right-of-way that are not covered by the proposed guidelines and must comply with the applicable requirements in the 2004 ADA and ABA Accessibility Guidelines (e.g., towers and temporary performance stages and reviewing stands).

R202 Alterations and Elements Added to Existing Facilities

The proposed guidelines apply to alterations and elements added to existing facilities. Alterations are changes to an existing facility that affect or could affect pedestrian access, circulation, or use (see R105.5). Alterations include, but are not limited to, resurfacing, rehabilitation, reconstruction, historic restoration, or changes or rearrangement of structural parts or elements of a facility. The Department of Justice and Department of Transportation may provide guidance on the meaning of the word "resurfacing" when they conduct rulemaking to include accessibility standards for pedestrian facilities in the public right-of-way in regulations implementing Title II of the Americans with Disabilities Act and Section 504. Comments requesting guidance on the meaning of the term "resurfacing" should be directed to the Department of Justice and Department of Transportation when they conduct rulemaking to include accessibility standards for pedestrian facilities in the public right-of-way in regulations implementing Title II of the Americans with Disabilities Act and Section 504.

Where elements are altered or added to existing facilities but the pedestrian circulation path to the altered or added elements is not altered, the pedestrian circulation path is not required to comply with the proposed requirements for pedestrian access routes. For example, if a new bench is installed on an existing sidewalk that has a cross slope exceeding 2 percent, the sidewalk is not required to be altered to reduce the cross slope because the bench is installed on the sidewalk. Advisory information recommends that, where possible, added elements should be located on an existing pedestrian access route. This provision is based on similar provisions in the 2004 ADA and ABA Accessibility Guidelines which do not require the circulation path to altered elements or spaces to comply with the requirements for accessible routes where the circulation path to the altered elements or spaces is not altered (see 202.3, Exception 1; and F202.3, Exception 1).

Where existing physical constraints make it impractical for altered elements, spaces, or facilities to fully comply with new construction requirements, compliance is required to the extent practicable within the scope of the project. Existing physical constraints include, but are not limited to, underlying terrain, right-of-way availability, underground structures, adjacent developed facilities, drainage, or the presence of a notable natural or historic feature.

The 2004 ADA and ABA Accessibility Guidelines (see 202.4 and F202.4) and the Department of Justice regulations implementing Title II of the Americans with Disabilities Act (see 28 CFR 35.151 (b)) include an additional requirement for facilities on sites whereby an alteration that affects or could affect the usability of or access to an area containing a "primary function" must be made so as to ensure that, to the maximum extent feasible, the "path of travel" to the altered area is accessible, unless the additional cost and scope of the alterations to provide an accessible "path of travel" are disproportionate to the cost of the alteration to the "primary function" area. The Department of Justice regulations define the terms "primary function" and "path of travel." See 28 CFR 35.151 (b) (4) (i) and (ii). According to the Department of Justice regulations, a "primary function" is a major activity for which the facility is intended. "Primary function" areas include the dining area of a cafeteria, the meeting rooms in a conference center, as well as offices and other work areas in which the activities of the public entity using the facility are carried out. Mechanical rooms, boiler rooms, supply storage rooms, employee lounges or locker rooms, janitorial closets, entrances, and corridors are not "primary function" areas. Restrooms are not "primary function" areas unless the provision of restrooms is a primary purpose of the area (e.g., restrooms in highway rest stops). Alterations to windows, hardware, controls, electrical outlets, and signage are not alterations that affect the usability of or access to a "primary function" area.

The Department of Justice regulations further state that a “path of travel” includes a continuous, unobstructed way of pedestrian passage by means of which the altered area may be approached, entered, and exited, and which connects the altered area with an exterior approach (including sidewalks, streets, and parking areas), an entrance to the facility, and other parts of the facility. An accessible “path of travel” may consist of walks and sidewalks; curb ramps and other interior or exterior pedestrian ramps; clear floor paths through lobbies, corridors, rooms, and other improved areas; parking access aisles; elevators and lifts; or a combination of these elements; and also includes the restrooms, telephones, and drinking fountains serving the altered area.

The Department of Justice regulations deem the additional cost of alterations to provide an accessible “path of travel” to the altered area disproportionate when it exceeds 20 percent of the cost of the alteration to the “primary function” area. See 28 CFR 35.151 (b) (4) (iii). When the additional cost of alterations to provide an accessible “path of travel” to the altered area is disproportionate, the Department of Justice regulations require the “path of travel” to be made accessible to the extent that it can be made accessible without incurring disproportionate costs (i.e., an amount equal to 20 percent of the cost of the alteration to the “primary function” area must be expended to provide an accessible “path of travel” to the altered area). See 28 CFR 35.151 (b) (4) (iv). A similar requirement is not included in the proposed guidelines because of the uncertainty how the terms “primary function” and “path of travel” as defined in the Department of Justice regulations for facilities on sites would apply to pedestrian facilities in the public right-of-way. Revising the definitions of “primary function” and “path of travel” to apply to pedestrian facilities in the public right-of-way will not necessarily result in additional accessibility. For example, if an area that contains a “primary function” is defined to include sidewalks, an accessible “path of travel” would be required to the altered sidewalks, which in effect would require the cost and scope of planned sidewalk alteration projects to be increased by 20 percent. Sidewalk alteration projects can be planned to take into account the additional 20 percent scope and cost of work. For example, if a 5 block sidewalk alteration project would be planned in the absence of a requirement for an accessible “path of travel” to the altered sidewalks, imposing a requirement for an accessible “path of travel” to the altered sidewalks could result in a 4 block sidewalk alteration project being planned and the additional 20 percent scope and cost of work would result in a 5 block sidewalk alteration project.

Transitional segments of pedestrian access routes must connect to unaltered segments of existing pedestrian circulation paths and comply with the technical requirements for pedestrian access routes to the extent practicable. Alterations must not decrease or have the effect of decreasing the accessibility of a facility or an accessible connection to an adjacent building or site below the requirements for new construction in effect at the time of the alteration.

Where the State Historic Preservation Officer or Advisory Council on Historic Preservation determines that compliance with a requirement would threaten or destroy historically significant features of a qualified historic facility, compliance is required to the extent that it does not threaten or destroy historically significant features of the facility. A qualified historic facility is a facility that is listed in or is eligible for listing in the National Register of Historic Places, or is designated as historic under state or local law (see R105.5)

<u>R203 Machinery Spaces</u>

Vaults, tunnels, and other spaces used by service personnel only are not required to comply with the proposed guidelines.

R204 Pedestrian Access Routes

A pedestrian access route is a continuous and unobstructed path of travel provided for pedestrians with disabilities within or coinciding with a pedestrian circulation path in the public right-of-way (see R105.5). Pedestrian access routes in the public right-of-way ensure that the transportation network used by pedestrians is accessible to pedestrians with disabilities. Pedestrian access routes in the public right-of-way are analogous to accessible routes on sites in that they connect to accessible elements, spaces, and facilities in the public right-of-way, including accessible pedestrian signals and pedestrian pushbuttons, accessible street furniture, accessible transit stops and transit shelters, accessible on-street parking spaces and parking meters and parking pay stations serving those parking spaces, and accessible passenger loading zones. Pedestrian access routes in the public right-of-way also connect to accessible routes at building and facility site arrival points.[27]

Pedestrian access routes must be provided within:

- Sidewalks and other pedestrian circulation paths located in the public right-of-way;
- Pedestrian street crossings and at-grade rail crossings, including medians and pedestrian refuge islands; and
- Overpasses, underpasses, bridges, and similar structures that contain pedestrian circulation paths.

Where an overpass, underpass, bridge, or similar structure is designed for pedestrian use only and the approach slope to the structure exceeds 5 percent, a ramp, elevator, limited use/limited application elevator, or platform lift must be provided. Elevators and platform lifts must be unlocked during the operating hours of the facility served.

An advisory section notes that the Federal Highway Administration has issued guidance on the obligations of state and local governments to keep pedestrian access routes open and usable throughout the year, including snow and debris removal.

R205 Alternate Pedestrian Access Routes

Alternate pedestrian access routes must be provided when a pedestrian circulation path is temporarily closed by construction, alterations, maintenance operations, or other conditions. The alternate pedestrian access route must comply with the referenced MUTCD standards. The MUTCD standards require alternate pedestrian routes to be accessible and detectable, including warning pedestrians who are blind or have low vision about sidewalk closures. Proximity-actuated audible signs are a preferred means to warn pedestrians who are blind or have low vision about sidewalk closures.

R206 Pedestrian Street Crossings

27. The ADA and ABA Accessibility Guidelines require accessible routes on sites to connect to site arrival points, including public streets and sidewalks (see 206.2.1 and F206.2.1).

Pedestrian street crossings must comply with technical requirements in Chapter R3 that reference MUTCD standards for pedestrian signal phase timing. The technical requirements in Chapter R3 also include requirements for roundabouts and multi-lane channelized turn lanes.

R207 Curb Ramps and Blended Transitions

Curb ramps, blended transitions, or a combination of curb ramps and blended transitions must connect the pedestrian access routes at each pedestrian street crossing. Curb ramps and blended transitions must be wholly contained within the pedestrian street crossings served. Typically, two curb ramps must be provided at each street corner. In alterations where existing physical constraints prevent two curb ramps from being installed at a street corner, a single diagonal curb ramp is permitted at the corner.

R208 Detectable Warning Surfaces

Detectable warning surfaces consist of small truncated domes built in or applied to a walking surface that are detectable underfoot. On pedestrian access routes, detectable warning surfaces indicate the boundary between a pedestrian route and a vehicular route where there is a flush rather than a curbed connection for pedestrians who are blind or have low vision. Detectable warning surfaces are not intended to provide wayfinding for pedestrians who are blind or have low vision. An advisory section provides information on streetscape designs that can make wayfinding easier. Detectable warning surfaces must be provided at the following locations on pedestrian access routes and at transit stops:

- Curb ramps and blended transitions at pedestrian street crossings;
- Pedestrian refuge islands;
- Pedestrian at-grade rail crossings not located within a street or highway;
- Boarding platforms at transit stops for buses and rail vehicles where the edges of the boarding platform are not protected by screens or guards; and
- Boarding and alighting areas at sidewalk or street level transit stops for rail vehicles where the side of the boarding and alighting areas facing the rail vehicles is not protected by screens or guards.

Detectable warning surfaces are not required at pedestrian refuge islands that are cut-through at street level and are less than 1.8 meters (6 feet) in length in the direction of pedestrian travel because detectable warning surfaces must extend 610 millimeters (2 feet) minimum on each side of the island and be separated by a 610 millimeters (2 feet) minimum length of island without detectable warning surfaces (see R305.1.4 and R305.2.4). Installing detectable warning surfaces at cut-through pedestrian islands that are less than 1.8 meters (6 feet) in length would compromise the effectiveness of detectable warning surfaces. An advisory section recommends that where a cut-through pedestrian island is less than 1.8 meters (6 feet) in length and the pedestrian street crossing is signalized, the signal should be timed for a complete crossing of the street.

Comments from Individuals Who Are Blind or Have Low Vision

The National Federation of the Blind was a member of the advisory committee that recommended the proposed guidelines, but filed a minority report recommending detectable warning surfaces should be required only on curb ramps with slopes of 6.6 percent or less, and at medians and pedestrian refuge

islands. Comments on the 2002 draft guidelines from individuals who identified themselves as blind or having low vision supported requiring detectable warning surfaces on all curb ramps by a margin of 2:1.

Detectable Warning Surfaces on Curb Ramps

When the Access Board issued the 1991 ADAAG, the guidelines contained a requirement for detectable warning surfaces on curb ramps. The requirement was temporarily suspended between 1994 and 2001 pending additional research and review of issues relating to requirement. The Access Board deferred addressing detectable warning surfaces on curb ramps in the 2004 ADA and ABA Accessibility Guidelines pending completion of the guidelines for pedestrian facilities in the public right-of-way. As a result of these actions, there are different requirements for detectable warning surfaces on curb ramps in the accessibility standards included the regulations issued by the Department of Justice implementing Title II of the Americans with Disabilities Act and by the Department of Transportation implementing Section 504.

When the Department of Justice initially issued regulations in 1991 implementing Title II of the Americans with Disabilities Act, the regulations required state and local governments to use accessibility standards (hereinafter referred to as the "DOJ 1991 Standards") that included the 1991 ADAAG which contained a requirement for detectable warning surfaces on curb ramps, or the Uniform Federal Accessibility Standards (UFAS) which did not contain a requirement for detectable warning surfaces on curb ramps.[28] When the Department of Justice adopted the DOJ 2010 Standards, those standards included the 2004 ADA and ABA Accessibility Guidelines which do not contain a requirement for detectable warning surfaces on curb ramps.

The Department of Transportation regulations implementing Section 504 require state and local governments that receive federal financial assistance directly or indirectly from the Department to use accessibility standards that include the 2004 ADA and ABA Accessibility Guidelines, as modified by the Department, or UFAS. See 49 CFR 27.3 (b). The Department of Transportation modified the 2004 ADA and ABA Accessibility Guidelines by retaining certain requirements from the 1991 ADAAG, including the requirement for detectable warning surfaces on curb ramps. See 406.8 in Appendix A to 49 CFR part 37.

State and local transportation departments will be affected differently by the requirement in the proposed guidelines for detectable warning surfaces on curb ramps depending on the accessibility standards that they use for curb ramps in the public right-of-way. The Access Board reviewed the standard drawings for the design of curb ramps on state transportation department websites and found that the transportation departments in all 50 states and the District of Columbia specify detectable warning surfaces on curb ramps in the standard drawings.[29] Most local transportation departments use standard drawings for the design of curb ramps that are consistent with the standard drawings maintained by their

28. UFAS was issued in 1984 by the General Services Administration and other federal agencies responsible for issuing accessibility standards for facilities covered by the Architectural Barriers Act. See 49 FR 31528 (August 7, 1984).
29. Links to each state transportation department's standard drawings that specify detectable warning surfaces on curb ramps are available on the Access Board website at: http://www.access-board.gov/prowac/index.htm.

state transportation departments. These state and local transportation departments use either the DOJ 1991 Standards, which include the 1991 ADAAG requirement for detectable warning surfaces on curb ramps, or the Department of Transportation accessibility standards, which include the 2004 ADA and ABA Accessibility Guidelines as modified by the Department to include the requirement from the 1991 ADAAG for detectable warning surfaces on curb ramps.[30]

Governmental Units Affected

State and local transportation departments are divided into four groups for the purpose of evaluating the impacts of the requirement in the proposed guidelines for detectable warning surfaces on curb ramps:

- Group 1 consists of state and local transportation departments that use UFAS for curb ramps as currently permitted by the Department of Justice and Department of Transportation regulations implementing Title II of the Americans with Disabilities Act and Section 504. UFAS did not contain a requirement for detectable warning surfaces on curb ramps. The Access Board is not aware of any state or local transportation departments that use UFAS. The Department of Justice regulations do not permit the use of UFAS on or after March 15, 2012. See 28 CFR 35.151 (c) (3). Thus, Group 1 will cease to exist as of March 15, 2012, and any state and local transportation departments currently in Group 1 will fall into one of the other groups.

Question 4. The Access Board seeks information on whether any state and local transportation departments currently use UFAS for curb ramps in the public right-of-way.

- Group 2 consists of state and local transportation departments that receive federal financial assistance directly or indirectly from the Department of Transportation. State and local transportation departments in Group 2 are required to comply with the accessibility standards in the Department of Justice regulations implementing Title II of the Americans with Disabilities Act and the Department of Transportation regulations implementing Section 504. Where the requirements in the accessibility standards in the Department of Justice and Department of Transportation regulations differ, the more stringent requirement must be used. Excluding any state and local transportation departments in Group 1, state and local transportation departments in Group 2 must comply with the requirement for detectable warning surfaces on curb ramps in the Department of Transportation regulations because it is the more stringent requirement. All state transportation departments and most local transportation departments are in Group 2 and specify detectable warning surfaces on curb ramps in their standard drawings. The requirement in the proposed guidelines for detectable warning

30. The DOJ 1991 Standards require detectable warning surfaces to extend the full width and depth of the curb ramp (see 4.7.7, Appendix E to 28 CFR part 36). The Department of Transportation standards require detectable warning surfaces to extend the full width of the curb ramp (exclusive of flared sides) and either the full depth of the curb ramp or 24 inches deep minimum measured from the back of the curb on the ramp surface (see 406.8, Appendix A to 49 CFR part 37). Guidance issued by the Department of Justice permits the use of the Department of Transportation standards for detectable warning surfaces on curb ramps. See Department of Justice, "ADA Best Practices Tool Kit for State and Local Governments, Curb Ramps and Pedestrian Crossings" (May 7, 2006) at: http://www.ada.gov/pcatoolkit/toolkitmain.htm.

surfaces on curb ramps will not have any impacts on state and local transportation departments in Group 2.

- Group 3 consists of local transportation departments that do not receive federal financial assistance directly or indirectly from the Department of Transportation. Local transportation departments in Group 3 are required to comply only with the accessibility standards in the Department of Justice regulations implementing Title II of the Americans with Disabilities Act. Excluding any local transportation departments in Group 1, local transportation departments in Group 3:
  a) Used the DOJ 1991 Standards, which include the 1991 ADAAG and contain a requirement for detectable warning surfaces on curb ramps, before September 15, 2010. See 28 CFR 35.151 (c) (1).
  b) Are permitted to use the DOJ 1991 Standards, which include the 1991 ADAAG and contain a requirement for detectable warning surfaces on curb ramps, or the DOJ 2010 Standards, which include the 2004 ADA and ABA Accessibility Guidelines and do not contain a requirement for detectable warnings on curb ramps, between September 15, 2010 and March 14, 2012. See 28 CFR 35.151 (c) (2).
  c) Must use the DOJ 2010 Standards, which include the 2004 ADA and ABA Accessibility Guidelines and do not contain a requirement for detectable warnings on curb ramps, on or after March 15, 2012. See 28 CFR 35.151 (c) (3).

  Thus, local transportation departments in Group 3 were required to provide detectable warning surfaces on curb ramps before September 15, 2010; may or may not be required to provide detectable warning surfaces on curb ramps between September 15, 2010 and March 14, 2012 depending on the accessibility standard they use (DOJ 1991 Standards or DOJ 2010 Standards); and are not required to provide detectable warning surfaces on curb ramps on or after March 15, 2012 pending the future adoption of accessibility standards for pedestrian facilities in the public right-of-way by the Department of Justice.

Question 5. The Access Board seeks information on whether local transportation departments in Group 3 will continue or discontinue providing detectable warning surfaces on curb ramps in the public right-of-way pending the future adoption of accessibility standards for pedestrian facilities in the public right-of-way by the Department of Justice.

- Group 4 consists of state and local transportation departments that do not comply with accessibility standards for curb ramps in the public right-of-way. The Department of Justice and Federal Highway Administration have provided guidance on accessibility standards that apply to curb ramps in the public right-of-way, including the requirement for detectable warning surfaces.[31] Despite the guidance provided by the Department of Justice and the Federal Highway Administration on the accessibility standards that apply to curb ramps in the public right-of-way, there may be state and local transportation departments that do not comply with the standards.

31. See Department of Justice, "ADA Best Practices Tool Kit for State and Local Governments, Curb Ramps and Pedestrian Crossings" (May 7, 2006) at: http://www.ada.gov/pcatoolkit/toolkitmain.htm; and Federal Highway Administration, "Information on Detectable Warnings" (May 6, 2002) at: http://www.fhwa.dot.gov/environment/bikeped/dwm.htm .

Question 6. Comments are requested on whether the future adoption of accessibility standards for pedestrian facilities in the public right of way by the Department of Justice and Department of Transportation in regulations implementing Title II of the Americans with Disabilities Act and Section 504 will have a positive or negative effect, or no effect on the compliance rates of state and local transportation departments, particularly with respect to providing detectable warning surfaces on curb ramps.

Question 7. The Access Board seeks information on the number of curb ramps that are constructed or altered on an annual basis in the public right-of-way by state and local transportation departments.

Costs to Provide Detectable Warning Surfaces on Curb Ramps

Detectable warning surfaces are available in a variety of materials. The Volpe Center gathered data from local transportation departments and vendors on various detectable warning materials and estimated the costs of 8 square feet of the materials for a typical curb ramp as shown in the table below. The estimates do not include installation costs.

Detectable Warning Surfaces	Materials Costs for Typical Curb Ramp
Concrete pavers	$48 to $80
Brick pavers	$128
Polymer and composite materials	$120 to $200
Stainless steel or cast iron products	$240

Question 8. The Access Board seeks additional information on the costs for detectable warning materials (8 square feet) and installation of the materials on a typical curb ramp.

Detectable Warning Surfaces on Boarding Platforms Used by Buses and Rail Vehicles, and Boarding and Alighting Areas Used by Rail Vehicles

The 1991 ADAAG and 2004 ADA and ABA Accessibility Guidelines contain a requirement for detectable warning surfaces on rail platforms.[32] The proposed guidelines adapt this requirement to transit stops in the public right-of-way, and require detectable warning surfaces on boarding platforms at transit stops for buses and rail vehicles (i.e., raised platforms used for level boarding by bus rapid transit systems and light rail systems) and at boarding and alighting areas at sidewalk or street level transit stops for rail vehicles. Detectable warning surfaces are not required where the edges of the boarding platform or the boarding and alighting areas facing the rail vehicles are protected by screens or guards.

Durability and Maintenance of Detectable Warning Surfaces

Transportation officials who commented on the 2002 draft guidelines expressed concern about the durability and maintenance of detectable warning surfaces. The National Cooperative Highway

32.See 1991 ADAAG, 10.3.1 (8); and 2004 ADA and ABA Accessibility Guidelines, 810.5.2.

Research Program (NCHRP) has conducted two studies on the durability and maintenance of detectable warning surfaces. The first study was completed in 2005 and reviewed performance information submitted by state and local transportation departments.[33] The performance information was limited in terms of the products reviewed and time period of review (about 2 years). The study noted that there were new promising detectable warning products on the market, and recommended that test methods be developed for evaluating the long-term performance and durability of the products. The second study was completed in 2010 and recommended procedures for testing and evaluating detectable warning products.[34] The test methods can be used by state and local transportation departments to select detectable warning products that will provide long-term performance and durability under different environmental conditions. Many state and local transportation departments have evaluated and approved detectable warning products that are suited to their environments.

R209 Accessible Pedestrian Signals and Pedestrian Pushbuttons

An accessible pedestrian signal and pedestrian pushbutton is an integrated device that communicates information about the WALK and DON'T WALK intervals at signalized intersections in non-visual formats (i.e., audible tones and vibrotactile surfaces) to pedestrians who are blind or have low vision. The pedestrian pushbutton has a locator tone for detecting the device and a tactile arrow to indicate which pedestrian street crossing is served by the device. The MUTCD contains standards for accessible pedestrian signals and pedestrian pushbuttons, but does not require that they be provided. The proposed guidelines require accessible pedestrian signals and pedestrian pushbuttons to be provided when new pedestrian signals are installed. For existing pedestrian signals, the proposed guidelines require accessible pedestrian signals and pedestrian pushbuttons to be provided when the signal controller and software are altered, or the signal head is replaced. Accessible pedestrian signals and pedestrian pushbuttons must comply with the referenced standards in the MUTCD and the technical requirements for operable parts in Chapter R4. Technical assistance and training on the installation of accessible pedestrian signals and pedestrian pushbuttons is available from the Access Board and transportation industry professional associations.[35]

Comments from Individuals Who Are Blind or Have Low Vision

The National Federation of the Blind was a member of the advisory committee that recommended the proposed guidelines, but filed a minority report recommending that state and local governments consult with the local blind community to determine whether to provide accessible pedestrian signals and

33. "Synthesis of Maintenance and Durability Information for Detectable Warnings on Sidewalks" March 2005 at: http://maintenance.transportation.org/Documents/DetectableWarning20-7%28177%29.pdf.
34. "Procedures for Testing and Evaluating Detectable Warning Systems" March 2010 at: http://online-pubs.trb.org/onlinepubs/nchrp/nchrp_rpt_670.pdf.
35. Technical assistance and training on the installation of accessible pedestrian signals are available on the following websites:
Access Board at: http://www.access-board.gov/research/pedestrian-signals/bulletin.htm;
Accessible Design for the Blind: http://www.accessforblind.org/aps_abt.html;
Institute of Transportation Engineers at: http://www.ite.org/education/olg.asp;
National Highway Cooperative Research Program at: http://www.apsguide.org/; and
Transportation Research Board at: http://www.trb.org/Main/Public/Blurbs/159938.aspx.

pushbuttons on an intersection-by-intersection basis. Comments on the 2002 draft guidelines from individuals who identified themselves as blind or having low vision supported providing accessible pedestrian signals and pushbuttons at each signalized intersection where pedestrian signals are newly installed or replaced by a margin of 2:1.

Governmental Units Affected

The Transportation Equity Act for the 21st Century (TEA-21) directed that audible traffic signals be included in transportation plans and projects where appropriate. See 23 U.S.C. 217 (g). Some state and local transportation departments currently provide accessible pedestrian signals and pedestrian pushbuttons when pedestrian signals are newly installed or replaced at signalized intersections. The requirement in the proposed guidelines for accessible pedestrian signals and pedestrian pushbuttons will have impacts on state and local transportation departments that do not currently provide accessible pedestrian signals and pedestrian pushbuttons when pedestrian signals are newly installed or replaced at signalized intersections.

Question 9. The Access Board seeks information on how many state and local transportation departments currently provide accessible pedestrian signals and pedestrian pushbuttons when pedestrian signals are newly installed or replaced at signalized intersections.

Costs to Provide Accessible Pedestrian Signals and Pedestrian Pushbuttons

The Volpe Center estimated the additional cost for an accessible pedestrian pushbutton compared to conventional pushbutton is $350 per unit. For a typical intersection with four crosswalks, two accessible pedestrian pushbuttons would be required at each corner for a total of eight units per intersection and a total additional cost of $2,800 for the eight units. The cost of the units is expected to decrease as a result of the proposed guidelines due to greater standardization of customer requirements and increased orders. The total additional cost to provide accessible pedestrian signals and pedestrian pushbuttons, including labor and other equipment such as stub poles and conduit, will vary by location. The Volpe Center estimated that the total additional costs are $3,600 per intersection based on a published cost study and interviews with local transportation departments.

Question 10. The Access Board seeks information from state and local transportation departments that currently provide accessible pedestrian signals and pedestrian pushbuttons on the additional costs to provide the accessible pedestrian signals and pedestrian pushbuttons.

The Volpe Center estimated that pedestrian signals are newly installed or replaced at 13,095 signalized intersections on an annual basis based on the following assumptions:

- There are over 300,000 existing signalized intersections in the United States using a rule-of-thumb of one signalized intersection per 1,000 population.[36]
- There are 2,550 new signalized intersections in the United States each year based on the US Census Bureau forecast of future population growth (0.85 percent).

36. See MUTCD "Frequently Asked Questions – Part 4 – Highway Traffic Signals" at: http://mutcd.fhwa.dot.gov/knowledge/faqs/faq_part4.htm.

- Ninety (90) percent of new and existing signalized intersections in the United States provide pedestrian signals.
- The life cycle or replacement rate for existing pedestrian signals is 25 years.

The Volpe Center estimated that the total annual costs are $47 million for requiring accessible pedestrian signals and pedestrian pushbuttons when pedestrian signals are newly installed or replaced at signalized intersections.

Question 11. Comments are requested on the assumptions used to estimate the total annual costs for requiring accessible pedestrian signals and pushbuttons when pedestrian signals are newly installed or replaced at signalized intersections.

R210 Protruding Objects

Objects that protrude into pedestrian circulation paths can be hazardous for pedestrians, especially pedestrians who are blind or have low vision. Objects along or overhanging any portion of a pedestrian circulation path must comply with the technical requirements for protruding objects in Chapter R4. Objects also must not reduce the clear width required for pedestrian access routes. An advisory section provides examples of street furniture and other objects that must comply with these requirements, and notes that the AASHTO "Guide for the Planning, Design, and Operation of Pedestrian Facilities" recommends that local governments regulate the use of sidewalks by private entities for activities such as outdoor dining, vending carts and stands, and street fairs under an encroachment permit process that addresses accessibility, including protruding objects and maintaining the clear width of pedestrian access routes.

R211 Signs

Signs that provide directions, warnings, or other information for pedestrians only and signs that identify routes served by transit stops must comply with the technical requirements for visual characters in Chapter R4. An advisory section provides examples of signs that are required and are not required to comply with the technical requirements for visual characters in Chapter R4. Signs displaying the International Symbol of Accessibility must be provided at accessible parking spaces and accessible passenger loading zones.

The 2004 ADA and ABA Accessibility Guidelines contain similar requirements for transit signs (see 810.4 and 810.6). In the 2004 ADA and ABA Accessibility Guidelines, characters on bus route signs must comply with the technical requirements for character height "to the maximum extent practicable."[37] The phrase "to the maximum extent practicable" was intended to provide flexibility where there are restrictions on the size of signs. A similar provision is not included in the proposed guidelines because it is almost always practicable to comply with the technical requirements for character height.

37. The 2004 ADA and ABA Accessibility Guidelines also do not require bus route signs to comply with the technical requirements for minimum height above the ground and line spacing (see 703.5.6, 703.5.9, and 810.4).

Audible sign systems and other technologies are widely used today to transmit information and are more usable by pedestrians who are blind or have low vision.[38] Where audible sign systems and other technologies are used to transmit information equivalent to the information contained on signs, the signs are not required to comply with the technical requirements for visual characters in Chapter R4.

Question 12. The Access Board seeks information on technologies that are currently used or are under development to transmit information that is equivalent to the information contained on pedestrian signs and transit signs provided in the public right-of-way.

R212 Street Furniture

Drinking fountains, public toilet facilities, tables, and counters must comply with applicable requirements in the 2004 ADA and ABA Accessibility Guidelines. Where multiple single-user public toilet facilities are clustered at a single location, at least 5 percent, but no less than one, of the toilet facilities in each cluster must be accessible and identified by the International Symbol of Accessibility. At least 50 percent, but no less than one, of benches at each location must provide a clear space for a wheelchair adjacent to the bench. Benches at tables are not required to comply.

R213 Transit Stops and Transit Shelters

Transit stops and transit shelters must comply with the technical requirements for transit stops and transit shelters in Chapter R3. Transit stops in the public right-of-way typically serve fixed route bus systems, including bus rapid transit systems, and light rail transit systems. An advisory section notes that the Federal Highway Administration has issued guidance on the obligation of state and local transportation departments, metropolitan planning organizations, and transit agencies to coordinate the planning and funding of accessibility improvements to transit systems and facilities.

R214 On-Street Parking Spaces

Where on-street parking is provided on the block perimeter and the parking is marked or metered, a minimum number of parking spaces must be accessible and comply with the technical requirements for parking spaces in Chapter R3. For every 25 parking spaces on the block perimeter up to 100 spaces, one parking space must be accessible. For every additional 50 parking spaces on the block perimeter between 101 and 200 spaces, an additional parking space must be accessible. Where more than 200 parking spaces are provided on the block perimeter, 4 percent of the parking spaces must be accessible. Metered parking includes parking metered by parking pay stations. Where parking is metered by parking pay stations and the parking is not marked, each 6.1 meters (20 feet) of the block perimeter where parking is permitted is counted as one parking space for determining the minimum number of accessible parking spaces.

R215 Passenger Loading Zones

38. The ANSI approved standard “ICC A117.1-2009: Accessible and Usable Buildings and Facilities” includes technical requirements for remote infrared audible sign systems (see 703.8).

Where passenger loading zones are provided, at least one passenger loading zone for each 30 meters (100 feet) of continuous loading zone space or fraction thereof must be accessible and comply with the technical requirements for passenger loading zones in Chapter R3.

R216 Stairways and Escalators

Stairways on pedestrian circulation paths must comply with technical requirements for stairways in Chapter R4. Escalators on pedestrian circulation paths must comply with the applicable technical requirements in the 2004 ADA and ABA Accessibility Guidelines. Stairways and escalators cannot be part of a pedestrian access route.

R217 Handrails

Handrails are not required on pedestrian circulation paths. However, if handrails are provided on pedestrian circulation paths, the handrails must comply with the technical requirements for handrails in Chapter R4.

R218 Doors, Doorways, and Gates

Doors, doorways, and gates to pedestrian facilities such as transit shelters must comply with applicable technical requirements in the 2004 ADA and ABA Accessibility Guidelines.

Chapter R3: Technical Requirements

Technical requirements specify what design criteria elements, spaces, and facilities must comply with in order to be considered accessible.

R301 General

The technical requirements in Chapter R3 apply where required by the scoping requirements in Chapter R2, or where referenced by another technical requirement in Chapters R3 or R4.

R302 Pedestrian Access Routes

General (R302.1)

The technical requirements for pedestrian access routes are contained in R302, and adapt the technical requirements for accessible routes in the 2004 ADA and ABA Accessibility Guidelines to the public right-of-way. In alterations where existing physical constraints make it impractical to fully comply with the technical requirements, compliance is required to the extent practicable within the scope of the project (see R202.3.1).

Components (R302.2)

The components of pedestrian access routes and the technical requirements for each component are listed in R302.2. Sidewalks and other pedestrian circulation paths, pedestrian street crossings, and pedestrian overpasses and underpasses and similar structures must comply with all the technical

requirements in R302.3 through R302.7. Curb ramps and blended transitions must comply with the technical requirements in R302.7 and R304. Ramps must comply with the technical requirements in R407. Elevators, limited use/limited application elevators, platform lifts, and doors, doorways, and gates must comply with applicable technical requirements in the 2004 ADA and ABA Accessibility Guidelines.

Continuous Width (R302.3)

The continuous clear width of pedestrian access routes (exclusive of the width of the curb) must be 1.2 meters (4 feet) minimum, except for medians and pedestrian refuge islands where the clear width must be 1.5 meters (5 feet) minimum in order to allow for passing space. The AASHTO "Guide for the Planning, Design, and Operation of Pedestrian Facilities" recommends that sidewalks be wider than 1.2 meters (4 feet), particularly in urban areas. Where sidewalks are wider than 1.2 meters (4 feet), only a portion of the sidewalk is required to comply with the technical requirements in R302.3 through R302.7.

The advisory committee recommended a minimum width of 1.5 meters (5 feet) for pedestrian access routes. The proposed guidelines specify a minimum width of 1.2 meters (4 feet) in order to allow for street furniture and other objects that may be located on sidewalks. R210 prohibits street furniture and other objects from reducing the clear width required for pedestrian access routes. A minimum width of 1.2 meters (4 feet) will accommodate turns at intersections and building entrances. Advisory information recommends additional maneuvering clearance at turns or changes in direction, recesses and alcoves, building entrances, and along curved or angled routes, particularly where the grade exceeds 5 percent.

Passing Spaces (R302.4)

Where the clear width of pedestrian access routes is less than 1.5 meters (5 feet), passing spaces must be provided at intervals of 61 meters (200 feet) maximum. Passing spaces must be 1.5 meters (5 feet) minimum by 1.5 meters (5 feet) minimum. Passing spaces are permitted to overlap pedestrian access routes.

Grade (R302.5)

Grade is the slope parallel to the direction of pedestrian travel. Grade is calculated by dividing the vertical change in elevation by the horizontal distance covered, and is expressed as a percent. Where pedestrian access routes are contained within a street or highway right-of-way, the grade of the pedestrian access route is permitted to equal the general grade established for the adjacent street or highway, except that where pedestrian access routes are contained within pedestrian street crossings a maximum grade of 5 percent is required. This is consistent with the AASHTO "Policy on Geometric Design of Highways and Streets" which recommends that the sidewalk grade follow the grade of adjacent roadways, and also recommends maximum cross slopes for roadways. Where pedestrian access routes are not contained within a street or highway right-of-way, a maximum grade of 5 percent is required.

Cross Slope (R302.6)

Cross slope is the slope perpendicular to the direction of pedestrian travel (see R105.5). On a sidewalk, cross slope is measured perpendicular to the curb line or edge of the street or highway. Cross slope

impedes travel by pedestrians who use wheeled mobility devices since energy must be expended to counteract the perpendicular force of the cross slope. Cross slope makes it more difficult for pedestrians who use wheelchairs to travel on uphill slopes and to maintain balance and control on downhill slopes. Cross slope also negatively affects pedestrians who use braces, lower limb prostheses, crutches, or walkers, as well as pedestrians who have gait, balance, or stamina impairments. The maximum cross slope permitted on accessible routes in the 2004 ADA and ABA Accessibility Guidelines is 2 percent. In exterior environments, a maximum cross slope of 2 percent is generally accepted as adequate to allow water to drain off paved walking surfaces.

A maximum cross slope of 2 percent is specified for pedestrian access routes, except for pedestrian access routes contained within certain pedestrian street crossings in order to allow for typical roadway geometry. A 5 percent maximum cross slope is specified for pedestrian access routes contained within pedestrian street crossings without yield or stop control to avoid any unintended negative impacts on the control and safety of vehicles, their occupants, and pedestrians in the vicinity of the intersection. Pedestrian street crossings without yield or stop control are crossings where there is no yield or stop sign, or where there is a traffic signal that is designed for the green phase. At pedestrian street crossings without yield or stop control vehicles can proceed through the intersection without slowing or stopping. The cross slope of pedestrian access routes contained within midblock pedestrian street crossings is permitted to equal the street or highway grade.

Question 13. Comments are requested on whether the description of pedestrian street crossings without yield or stop control is clear, or whether there is a better way to describe such crossings?

In new construction, where pedestrian access routes within sidewalks intersect at corners, the 2 percent maximum cross slope requirement will result in level corners (i.e., the slope at the corners will not exceed 2 percent in each direction of pedestrian travel). The level corners will provide a platform for providing level spaces for curb ramps and blended transitions, pedestrian street crossings, and accessible pedestrian signals and pedestrian pushbuttons.

Newly Constructed Tabled Intersections That Contain Pedestrian Street Crossings With Yield or Stop Control

The 2 percent maximum cross slope requirement applies to pedestrian access routes within pedestrian street crossings with yield or stop control where vehicles slow or stop before proceeding through the intersection. The cross slope of the pedestrian access route within the pedestrian street crossing is the longitudinal grade of the street being crossed, and the 2 percent maximum cross slope requirement will impact the vertical alignment of streets in the vicinity of the intersection. In new construction, street intersections in hilly urban areas are typically cut-and filled to produce relative flat or tabled intersections. Where pedestrian street crossings with yield or stop control are provided at newly constructed tabled intersections, the tabling would be extended to the pedestrian street crossings to comply with the 2 percent maximum cross slope for pedestrian access routes within the pedestrian street crossings.

Question 14. The Access Board seeks information on the current design policies and practices of state and local transportation departments with respect to tabling newly constructed intersections in hilly urban areas, and particularly whether the tabling is extended to pedestrian street crossings with yield or stop control.

In new construction, extending the tabling of intersections to pedestrian street crossings with yield or stop control involves additional costs for site preparation, grading, and earthwork. The Volpe Center roughly estimated the additional costs to extend the tabling to pedestrian street crossings with yield or stop control to be $60,000 per intersection based on information provided by a transportation official to the Access Board. The costs will vary by site.

Question 15. The Access Board seeks information on the additional costs to extend the tabling of newly constructed intersections in hilly urban areas to pedestrian street crossings with yield or stop control.

Question 16. The Access Board seeks information on number of tabled intersections which contain pedestrian street crossings with yield or stop control that are newly constructed in hilly urban areas on an annual basis by state and local transportation departments.

Surfaces (R302.7)

The proposed technical requirements for surfaces apply to pedestrian access routes, including curb ramps and blended transitions, and accessible elements and spaces that connect to pedestrian access routes. An advisory section lists the accessible elements and spaces that connect to pedestrian access routes and are required to comply with the technical requirements for surfaces.

The surfaces of pedestrian access routes and the surfaces at accessible elements and spaces that connect to pedestrian access routes must be firm, stable, and slip resistant. Vertical alignment of surfaces within pedestrian access routes (including curb ramp runs, blended transitions, turning spaces, and gutter areas within pedestrian access routes) and within the surfaces at accessible elements and spaces that connect to pedestrian access routes must be generally planar. Grade breaks (i.e., the line where two surface planes with different grades meet, see R105.5) must be flush. Where pedestrian access routes cross rails at grade, the pedestrian access route must be level and flush with the top of the rail at the outer edges of the rails, and the surfaces between the rails must be aligned with the top of the rail.

Vertical surface discontinuities (i.e., vertical difference in level between two adjacent surfaces, see R105.5) must be 13 millimeters (0.5 inch) maximum. Vertical surface discontinuities between 6.4 millimeters (0.25 inch) and 13 millimeters (0.5 inch) must be beveled with a slope not steeper than 50 percent, and the bevel must be applied across the entire vertical surface discontinuity. Horizontal openings in gratings and joints must not permit the passage of a sphere more than 13 millimeters (0.5 inch) in diameter. Elongated openings in gratings must be placed so that the long dimension is perpendicular to the dominant direction of travel.

Flangeway gaps at pedestrian at-grade rail crossings must be 64 millimeters (2.5 inches) maximum on non-freight rail track, and 75 millimeters (3 inches) maximum on freight rail track. These are the typical gaps required to allow passage of train wheel flanges. The flangeway gaps are wider than the maximum gap allowed for horizontal openings in other surfaces. These wider flangeway gaps pose a potential safety hazard to pedestrians who use wheelchairs because the gap can entrap the wheelchair casters.[39] The Federal Railroad Administration is sponsoring research to develop materials or devices that will fill the flangeway gap under light loads of a wheelchair but will compress or retract when a train wheel

flange passes over it.[40] The materials or devices will be tested under heavy and light train loads for safety, effectiveness, durability, and cost.

Question 17. The Access Board seeks information on materials and devices that fill the flangeway gap, and any related research and sources of expertise.

R303 Alternate Pedestrian Access Routes (See R205)

In the 2005 draft of the proposed guidelines, the technical requirements for alternate pedestrian access routes were contained in Chapter R3. The proposed guidelines reference MUTCD standards for alternate pedestrian access routes in the scoping requirements at R205. This section heading is included in Chapter R3 of the proposed guidelines to notify readers who were familiar with the 2005 draft of the proposed guidelines where to find the requirements for alternate pedestrian access routes. This section heading will not be included in the final guidelines.

R304 Curb Ramps and Blended Transitions

General (R304.1)

Curb ramps are ramps that are cut through or built up to the curb (see R105.5). Curb ramps can be perpendicular or parallel, or a combination of parallel and perpendicular ramps. Blended transitions are raised pedestrian street crossings, depressed corners, or similar connections between the pedestrian access route at the level of the sidewalk and the level of the pedestrian street crossing that have a grade of 5 percent or less (see R105.5).

The technical requirements for curb ramps and blended transitions are contained in R304 and adapt the technical requirements for curb ramps in the 2004 ADA and ABA Accessibility Guidelines to the public right-of-way. In alterations where existing physical constraints make it impractical to fully comply with the technical requirements, compliance is required to the extent practicable within the scope of the project (see R202.3.1).

Perpendicular Curb Ramps (R304.2)

39. For additional information on the potential safety hazard of flangeway gaps, see "Wheelchair Safety at Rail Level Crossings, International Review Working Paper" (2003) at http://www.transport.vic.gov.au/DOI/DOIElect.nsf/ $UNIDS+for+Web+Display/43D9BDF138FFE9F9CA256D630011A607/$FILE/Rail_Crossing_Disability_Access-International_Review.pdf ; and "Rail Crossing Disability Access Kit" (2003) available at: http://www.transport.vic.gov.au/DOI/DOIElect.nsf/$UNIDS+for+Web+Display/E995EA3FEB44F07CCA256D630011AD71/$FILE/Rail_Crossing_Disability_Access-Toolkit.pdf.
40. For announcement of award of research contact in 2010, see http://www.volpe.dot.gov/sbir/ph1rec10.html and http://www.integran.com/news/IT%20USA%20DOT%20Flangeway%20Gap%20SBIR%20-%20100323.pdf. The Transportation Research Board has also developed research need statements for reducing flangeway gaps at railroad crossings. See "Wheelchairs Crossing Flangeway Gaps at Railroad Crossings" (2007); and "Reducing Flangeway Gaps at Railroad Crossings to Better Accommodate Pedestrians" (2008). The research need statements are available at: http://rns.trb.org/dproject.asp?n=13462 and http://rns.trb.org/dproject.asp?n=17644.

Perpendicular curb ramps have a running slope that cuts through or is built up to the curb at right angles or meets the gutter grade break at right angles where the curb is curved. On corners with a large curb radius, it will be necessary to indent the gutter grade break on one side of the curb ramp in order for the curb ramp to meet the gutter grade break at right angles.

A turning space must be provided at the top of perpendicular curb ramps. The turning space must be 1.2 meters (4 feet) minimum by 1.2 meters (4 feet) minimum, and is permitted to overlap other turning spaces and clear spaces. Where the turning space is constrained at the back of the sidewalk, the turning space must be 1.2 meters (4 feet) minimum by 1.5 meters (5 feet) minimum, with the 1.5 meters (5 feet) dimension provided in the direction of the ramp run.

A minimum running slope of 5 percent and a maximum running slope of 8.3 percent are specified for perpendicular curb ramps, and the ramp length is limited to 4.5 meters (15 feet). A maximum running slope of 2 percent is specified for the turning space at the top of the curb ramp. The running slope is measured parallel to the direction of pedestrian travel.

A maximum slope of 10 percent is specified for the flared sides of perpendicular curb ramps where a pedestrian circulation path crosses the curb ramp. The flared sides are part of the pedestrian circulation path, but are not part of the pedestrian access route. The slope of the flared sides is measured parallel to the curb line. The 10 percent maximum slope for the flared sides is the same as in the 2004 ADA and ABA Accessibility Guidelines (see 403.6). Transportation officials have reported that the 10 percent maximum slope for the flared sides can make it difficult to provide two perpendicular curb ramps at some street corners due to the width of the flared sides at the base of the curb ramp. The Access Board is considering increasing the maximum slope for the flared sides to 12.5 percent or 16.7 percent to address this issue.

Question 18. Comments are requested on whether the maximum slope for the flared sides of perpendicular curb ramps should be increased from 10 percent to 12.5 percent or 16.7 percent, and what impact such a change would have on providing two perpendicular curb ramps at street corners. Comments are also requested on any public safety issues that may arise from increasing the maximum slope for the flared sides from 10 percent to 12.5 percent or 16.7 percent.

Parallel Curb Ramps (R304.3)

Parallel curb ramps have a running slope that is in-line with the direction of sidewalk travel and lower the sidewalk to a level turning space where a turn is made to enter the pedestrian street crossing.

A turning space must be provided at the bottom of parallel curb ramps. The turning space must be 1.2 meters (4 feet) minimum by 1.2 meters (4 feet) minimum, and is permitted to overlap other turning spaces and clear spaces. Where the turning space is constrained on two or more sides, the turning space must be 1.2 meters (4 feet) minimum by 1.5 meters (5 feet) minimum, with the 1.5 meters (5 feet) dimension provided in the direction of the pedestrian street crossing.

A minimum running slope of 5 percent and a maximum running slope of 8.3 percent are specified for parallel curb ramps, and the ramp length is limited to 4.5 meters (15 feet). A maximum running slope of

2 percent is specified for the turning space at the bottom of the curb ramp. The running slope is measured parallel to the direction of pedestrian travel.

Blended Transitions (R304.4)

A maximum running slope of 5 percent is specified for blended transitions. The running slope is measured parallel to the direction of pedestrian travel.

Common Requirements (R304.5)

The clear width of curb ramp runs (excluding flared sides), blended transitions, and turning spaces must be 1.2 meters (4 feet) minimum. Grade breaks at the top and bottom of curb ramp runs must be perpendicular to the direction of the ramp run. Grade breaks are not permitted on the surface of ramp runs and turning spaces. Surface slopes that meet at grade breaks must be flush. A maximum cross slope of 2 percent is specified for curb ramps, blended transitions, and turning spaces. At pedestrian street crossings without yield or stop control and at midblock pedestrian street crossings, the cross slope is permitted to equal the street or highway grade. The cross slope is measured perpendicular to the direction of pedestrian travel. A maximum counter slope of 5 percent is specified for the gutter or street at the foot of curb ramp runs, blended transitions, and turning spaces. A clear space must be provided beyond the bottom of the grade break that is within the width of the pedestrian street crossing and wholly outside the parallel vehicle traffic lane. The clear space must be 1.2 meters (4 feet) minimum by 1.2 meters (4 feet) minimum.

R305 Detectable Warning Surfaces

Detectable warning surfaces consist of truncated domes aligned in a square or radial grid pattern. The dimensions for dome size and dome spacing are the same as in the 2004 ADA and ABA Accessibility Guidelines. The detectable warning surfaces must contrast visually with adjacent gutter, street or highway, or pedestrian access route surface, either light-on-dark or dark-on-light. The detectable warning surfaces must extend 610 millimeters (2 feet) minimum in the direction of pedestrian travel. At curb ramps and blended transitions, detectable warning surfaces must extend the full width of the ramp run (excluding flared sides), blended transition, or turning space. At pedestrian at-grade rail crossings not located within a street or highway, detectable warning surfaces must extend the full width of the crossing. At boarding platforms for buses and rail vehicles, detectable warning surfaces must extend the full length of the public use areas of the platform. At boarding and alighting areas at sidewalk or street level transit stops for rail vehicles, detectable warning surfaces must extend the full length of the transit stop. The proposed technical requirements specify where detectable warning surfaces must be placed on perpendicular curb ramps, parallel cub ramps, blended transitions, pedestrian refuge islands, pedestrian at-grade rail crossings, boarding platforms for buses and rail vehicles, and boarding and alighting areas at sidewalk or street level transit stops for rail vehicles.

R306 Pedestrian Street Crossings

The technical requirements in R306 address pedestrian signal phase timing and pedestrian street crossings at roundabouts and multi-lane channelized turn lanes.

Pedestrian Signal Phase Timing

Pedestrian signal phase timing must comply with referenced MUTCD standards and use a pedestrian clearance time that is calculated based on pedestrian walking speed of 1.1 meters/second (3.5 feet/ second) or less.

Roundabouts

A roundabout is a circular intersection with yield control at entry, which permits a vehicle on the circulatory roadway to proceed, and with deflection of the approaching vehicle counter-clockwise around a central island (MUTCD section 1A.13). Pedestrian street crossings at roundabouts can be difficult for pedestrians who are blind or have low vision to identify because the crossings are located off to the side of the pedestrian circulation path around the street or highway. Where sidewalks are flush against the curb at roundabouts and pedestrian street crossing is not intended, a continuous and detectable edge treatment must be provided along the street side of the sidewalk at roundabouts. Detectable warning surfaces must not be used for edge treatment. Where chains, fencing, or railings are used for edge protection, the bottom edge of the treatment must be 380 millimeters (15 inches) maximum above the sidewalk to be detectable by cane.

The continuous traffic flow at roundabouts removes many of the audible cues that pedestrians who are blind use to navigate pedestrian street crossings. At roundabouts with multi-lane pedestrian street crossings, a pedestrian activated signal must be provided for each multilane segment of each crossing, including the splitter island (i.e., median island used to separate opposing directions of traffic entering and exiting a roundabout, MUTCD section 1A.13). Transportation officials who commented on the 2002 draft guidelines expressed concern that signalization of roundabouts would interfere with the flow of traffic at roundabout intersections. Pedestrian Hybrid Beacons can be used at roundabouts. See MUTCD sections 4F.01 through 4F.03. Pedestrian Hybrid Beacons are traffic signals that consist of a yellow signal centered below two horizontally aligned red signals. The signals are normally dark (i.e., not illuminated). The signals are initiated only upon pedestrian activation and can be timed to minimize the interruption of traffic. The signals cease operation after the pedestrian clears the crosswalk. When activated by a pedestrian, the following signals are displayed to drivers: a flashing yellow signal, then a steady yellow signal, then two steady red signals during the pedestrian walk interval, and then alternating flashing red signals during the pedestrian clearance interval. The following signals are displayed to pedestrians: a steady upraised hand (symbolizing DON'T WALK) when the flashing or steady yellow signal is operating, then a walking person (symbolizing WALK) when the steady red signals are operating, and then a flashing upraised hand (symbolizing DON'T WALK) when the alternating flashing red signals are operating. Transportation officials may request permission from the Federal Highway Administration to experiment with alternative signals at roundabouts (see MUTCD section 1A.10).[41]

41. The Federal Highway Administration has granted interim approval to Rectangular Flashing Rapid Beacons, which can be used at roundabouts. However, Rectangular Flashing Rapid Beacons do not provide positive indication to drivers to stop and positive indication to pedestrians that the walk interval has been actuated. Rectangular Flashing Rapid Beacons do not meet MUTCD standards for accessible pedestrian signals and pedestrian pushbuttons.

Multi-Lane Channelized Turn Lanes

Pedestrian activated signals must be provided at pedestrian street crossings at multi-lane channelized turn lanes at roundabouts and other signalized intersections. The pedestrian activated signals must comply with MUTCD standards for accessible pedestrian signals and pedestrian pushbuttons.

Governmental Units Affected

The requirement for pedestrian activated signals at roundabouts with multi-lane pedestrian street crossings will affect state and local transportation departments that construct new roundabouts with multi-lane pedestrian street crossings. The Volpe Center estimated that state and local transportation departments construct 27 new roundabouts with multi-lane pedestrian street crossings on an annual basis.[42]

Costs to Provide Pedestrian Activated Signals at Roundabouts with Multi-Lane Pedestrian Street Crossings

The Volpe Center estimated the cost to provide pedestrian activated signals at new roundabouts with multi-lane pedestrian street crossings to range from $90,000 to $230,000 per roundabout, and the total annual costs for requiring pedestrian activated signals at new roundabouts with multi-lane pedestrian street crossings to range from $2.4 million to $6.2 million.

Question 19. The Access Board seeks additional information on the number of roundabouts with multi-lane pedestrian street crossings that are newly constructed on an annual basis by state and local transportation departments, and the costs to provide pedestrian activated signals at newly constructed roundabouts with multi-lane pedestrian street crossings.

R307 Accessible Pedestrian Signals and Pedestrian Pushbuttons (See R209)

In the 2005 draft of the proposed guidelines, the technical requirements for accessible pedestrian signals and pedestrian pushbuttons were contained in Chapter R3. The proposed guidelines reference MUTCD standards for accessible pedestrian signals and pedestrian pushbuttons in the scoping requirements at R209. This section heading is included in Chapter R3 of the proposed guidelines to notify readers who were familiar with the 2005 draft of the proposed guidelines where to find the requirements for accessible pedestrian signals and pedestrian pushbuttons. This section heading will not be included in the final guidelines.

R308 Transit Stops and Transit Shelters

42. The Volpe Center used the roundabout database at: http://roundabout.kittelson.com/ to estimate the number of new roundabouts with multi-lane pedestrian street crossings that are constructed on an annual basis. During the five year period between 2005 and 2009, 435 new roundabouts were constructed, of which 117 were multi-lane. The data was adjusted for a small number of roundabouts that are listed in the database as having an “unknown” number of lanes and for roundabouts that do have any pedestrian facilities (i.e., sidewalks and pedestrian street crossings).

The technical requirements for transit stops and transit shelters are contained in R308 and adapt the technical requirements for transit facilities in the 2004 ADA and ABA Accessibility Guidelines to the public right-of-way.

Transit Stops (R308.1)

Boarding and alighting areas at sidewalk or street level transit stops must be 2.4 meters (8 feet) minimum measured perpendicular to the street or highway, and 1.5 meters (5 feet) minimum measured parallel to the street or highway. The grade of the boarding and alighting area parallel to the street or highway must be equal to street or highway grade to the extent practicable. The grade of the boarding and alighting area perpendicular to the street or highway must not exceed 2 percent. Where transit stops serve vehicles with more than one car, boarding and alighting areas serving each car must comply with these requirements.

Boarding platforms at transit stops must be positioned to coordinate with vehicles to minimize the vertical and horizontal gaps. The slope of boarding platforms must not exceed 2 percent in any direction. Where boarding platforms serve vehicles operating on existing track or existing street or highway, the slope of the platform parallel to the track or street or highway is permitted to equal the grade of the track or street or highway.

The surfaces of boarding and alighting areas and boarding platforms must comply with the technical requirements for surfaces (see R302.7). Boarding and alighting areas and boarding platforms must be connected to streets, sidewalks, or pedestrian circulation paths by a pedestrian access route.

Transit Shelters (R308.2)

Transit shelters must be connected by a pedestrian access route to boarding and alighting areas or boarding platforms. A clear space (see R404) must be provided entirely within the transit shelter. Where seating is provided within transit shelters, the clear space must be located either at the end of a seat, or not overlap the area within 460 millimeters (1.5 feet) from the front edge of the seat in order to not interfere with others using the seating. Environmental controls within transit shelters must be proximity actuated. Protruding objects within transit shelters must comply with the technical requirements for protruding objects (see R402).

The Access Board is considering whether to require a turning space in transit shelters. Transit shelter designs vary. Some transit shelters are enclosed on three or four sides, with an opening for ingress and egress. The turning space would be based on the 2004 ADA and ABA Accessibility Guidelines (see 304.3).[43] The turning space would be permitted to overlap the clear space within the transit shelter and

43. The 2004 ADA and ABA Accessibility Guidelines require a turning space to be either a circular space 1.5 meters (5 feet) minimum in diameter, or a T-shaped space within a square with sides 1.5 meters (5 feet) minimum where the arms and base of the T-Shaped space are 915 millimeters (3 feet) minimum. Each arm of the T-shaped space must be clear of obstructions 305 millimeters (1 foot) minimum in each direction, and the base must be clear of obstructions 610 millimeters (2 feet) minimum. A circular space is permitted to include knee and toe clearance. A T-shaped space is permitted to include knee and toe clearance only at the end of either the base or one arm.

the pedestrian access route, but would not be permitted to overlap the area within 460 millimeters (1.5 feet) from the front edge of seats in the transit shelter in order to not interfere with others using the seating. The portion of the turning space that does not overlap the clear space would be permitted to be outside the transit shelter.

Question 20. Comments are requested on whether a turning space should be required in transit shelters and what impact such a requirement would have on the design and placement of transit shelters?

R309 On-Street Parking Spaces

General (R309.1)

The technical requirements for accessible on-street parking spaces are contained in R309 and adapt the technical requirements for accessible parking spaces in the 2004 ADA and ABA Accessibility Guidelines to the public right-of-way.

Parallel Parking Spaces (R309.2)

Where the adjacent sidewalk or available right-of-way is more than 4.3 meters (14 feet) wide, an access aisle must be provided at street level for the entire length of each accessible parallel parking space. The access aisle must be 1.5 meters (5 feet) wide minimum and connect to a pedestrian access route. The access aisle must not encroach on the vehicular travel lane and comply with the technical requirements for surfaces (see R302.7). In alterations where the street or sidewalk adjacent to the parking spaces is not altered, an access aisle is not required provided the parking spaces are located at the end of the block face.

Where the adjacent sidewalk or available right-of-way is less than or equal to 4.3 meters (14 feet) wide, an access aisle is not required, but accessible parallel parking spaces must be located at the end of the block face.

Perpendicular and Angled Parking Spaces (R309.3)

An access aisle must be provided at street level for the entire length of each accessible perpendicular or angled parking space. The access aisle must be 2.4 meters (8 feet) wide minimum to accommodate vans with lifts, and connect to a pedestrian access route. Two accessible parking spaces are permitted to share a common access aisle. The access aisle must be marked to discourage parking in the aisle and comply with the technical requirements for surfaces (see R302.7).

Curb Ramps and Blended Transitions (R309.4)

Curb ramps or blended transitions must connect the access aisle serving each accessible on-street parking space to the pedestrian access route. Curb ramps are not permitted within the access aisle. Parking spaces at the end of block face can be served by curb ramps or blended transitions at the pedestrian street crossing. Detectable warning surfaces are not required on curb ramps and blended transitions that connect the access aisle to the sidewalk, including where the sidewalk is at the same

level as the parking spaces, unless the curb ramps and blended transitions also serve pedestrian street crossings.

Parking Meters and Parking Pay Stations (R309.5)

Operable parts of parking meters and parking pay stations that serve accessible on-street parking spaces must comply with technical requirements for operable parts in Chapter R4. Displays and information must be visible from a point located 1 meter (3.3 feet) maximum above the center of the clear space in front of the parking meter or parking pay station. At accessible parallel parking spaces, parking meters must be located at the head or foot of the space.

R310 Passenger Loading Zones

The technical requirements for accessible passenger loading zones are the same as in the 2004 ADA and ABA Accessibility Guidelines. A vehicular pull-up space 2.4 meters (8 feet) wide minimum and 6.1 meters (20 feet) long minimum must be provided at accessible passenger loading zones. An access aisle must be provided at the same level as the vehicle pull-up space. The access aisle must be 1.5 meters (5 feet) wide minimum, extend the entire length of the vehicle pull-up space, and connect to the pedestrian access route. The access aisle must be marked to discourage parking in the aisle and comply with the technical requirements for surfaces (see R302.7).

Chapter R4: Supplementary Technical Requirements

Chapter R4 contains supplementary technical requirements that are the same as in the 2004 ADA and ABA Accessibility Guidelines unless otherwise noted below.

R401 General

The supplementary technical requirements in Chapter R4 apply where required by scoping requirements in Chapter R2, or where referenced by another technical requirement in Chapters R3 or R4.

R402 Protruding Objects

Objects with leading edges between 685 millimeters (2.25 feet) and 2 meters (6.7 feet) above the finish surface must not protrude into pedestrian circulation paths more than 100 millimeters (4 inches). Post-mounted objects such as signs that are between 685 millimeters (2.25 feet) and 2 meters (6.7 feet) above the finish surface must not overhang pedestrian circulation paths more than 100 millimeters (4 inches) measured horizontally from the base of the post. The post base must be 64 millimeters (2.5 inches) thick minimum. Where objects are mounted between posts and the clear distance between the posts is more than 305 millimeters (1 foot), the lowest edge of the object must be 685 millimeters (2.25 feet) minimum or 2 meters (6.7 feet) maximum above the finish surface. The requirement for post-mounted objects differs from the 2004 ADA and ABA Accessibility Guidelines but is consistent with the MUTCD which requires the bottom of signs installed on the sidewalk to be 7 feet minimum above the sidewalk, and the bottom of secondary signs (i.e., signs mounted below another sign) that are lower than 7 feet above the sidewalk to project not more than 4 inches into the sidewalk (see MUTCD section 2A.18).

Guardrails or other barriers to pedestrian travel must be provided where the vertical clearance on pedestrian circulation paths is less than 2 meters (6.7 feet) high. The leading edge of the guardrail or barrier must be 685 millimeters (2.25 feet) maximum above the finish surface.

R403 Operable Parts

An operable part is a component of an element used to insert or withdraw objects, or to activate, deactivate, or adjust the element (see R105.5). The technical requirements for operable parts apply to operable parts on accessible pedestrian signals and pedestrian pushbuttons (see R209) and parking meters and parking pay stations that serve accessible parking spaces (see R309.5). A clear space must be provided at operable parts (see R404). Operable parts must be located within the reach ranges (see R406). Operable parts must be operable with one hand and not require tight grasping, pinching, or twisting of the wrist. The force required to activate operable parts must be no more than 22 newtons (5 pounds).

R404 Clear Spaces

Clear spaces are required at operable parts (see R403.2), including accessible pedestrian signals and pedestrian pushbuttons (see R209) and parking meters and parking pay stations that serve accessible parking spaces (see R309.5). Clear spaces are also required at benches (see R212.6) and within transit shelters (see R308.2). Clear spaces must be 760 millimeters (2.5 feet) minimum by 1220 millimeters (4 feet) minimum. Additional maneuvering space must be provided where an element is confined on all or part of three sides. Clear spaces are permitted to include knee and toe clearance and to be positioned for either forward or parallel approach to an element, unless another requirement specifies otherwise. The running slope of clear spaces is permitted to be consistent with the grade of the adjacent pedestrian access route. This requirement differs from the 2004 ADA and ABA Accessibility Guidelines which does not permit slopes steeper than 2 percent at clear spaces. A 2 percent maximum cross slope is specified for clear spaces. Clear spaces must comply with the technical requirements for surfaces (see R302.7).

R405 Knee and Toe Clearance

The technical requirements for knee and toe clearance apply where space beneath an element is included as part of the clear space.

R406 Reach Ranges

Forward and side reach ranges must be between 380 millimeters (1.25 feet) and 1220 millimeters (4 feet) above the finish surface. The requirements for reach ranges differ from the 2004 ADA and ABA Accessibility Guidelines in that forward reach over an obstruction is not permitted, and side reach over an obstruction is permitted where the depth of the obstruction between the clear space and the element is 225 millimeters (10 inches) maximum.

R407 Ramps

R408 Stairways

R409 Handrails

R410 Visual Characters on Signs

R411 International Symbol of Accessibility

The technical requirements ramps, stairways, handrails, visual characters on signs, and the International Symbol of Accessibility are the same as in the 2004 ADA and ABA Accessibility Guidelines.

Other Issues

Rollability and Smoothness of Walking Surfaces

Rollability refers to the ease and comfort with which pedestrians using wheelchairs and other wheeled mobility devices can travel on walking surfaces. Rough or jointed walking surfaces can cause pedestrians using wheelchairs and other wheeled mobility devices to expend extra energy or pushing effort that makes it more difficult for them to use the walking surface, and the resulting surface vibration can cause discomfort or pain that may prevent them from using the walking surface all together. There are smoothness measures for road surfaces but no similar measures for walking surfaces. The Access Board is sponsoring preliminary research that will produce a plan for a test protocol and instrumentation to measure the rollability and smoothness of walking surfaces and to establish an index of surface vibration.

Question 21. The Access Board seeks information on related research and sources of expertise on measuring the rollability and smoothness of walking surfaces, including information from the medical community on the effects of surface vibration on individuals with disabilities.

Shared Streets

A shared street is a common space designed for use by pedestrians, bicyclists, and vehicles.[44] Shared streets typically do not have curbs and delineated sidewalks. Vehicles typically travel at low speeds on shared streets. Trees, planters, parking areas, and other obstacles may be placed on shared streets to slow vehicles. Shared streets can be in a commercial area or residential area. Shared streets are difficult for pedestrians who are blind or have low vision to navigate because of the absence of curbs and clearly delineated sidewalks.[45] The Pedestrian Accessibility and Movement Environment Laboratory at

44. The Pedestrian and Bicycle Information Center provides information on shared streets on its website at: http://www.walkinginfo.org/engineering/calming-street.cfm.
45. Focus groups and surveys of pedestrians who are blind or have low vision commissioned by the Guide Dogs for the Blind Association in the United Kingdom and Netherlands document the difficulties that these pedestrians have using shared streets. See "The Impact of Shared Surface Streets and Shared Use Pedestrian/Cycle Paths on the Mobility and Independence of Blind and Partially Sighted People" (2010) available at: http://gdbass.netefficiency.co.uk/fileadmin/sharedsurfaces/user/documents/TNS_Report_Text_version_Impact_of_shared_surface_streets_and_shared_use_paths_GD_2010.doc ; "Shared Surface Street Design Research Project, The Issues: Report of Focus Groups" (2006) at http://community.stroud.gov.uk/_documents/23_Shared_Surface_Street_Design_Research_Project.pdf ; and "Shared Surface Street Design: Report of Focus Groups Held in Holland" (2006) at http://www.alan-hunt.co/pdf/Report_of_Holland_Focus_Groups.pdf.

University College London has conducted limited research on the use of tactile surfaces to delineate the space on shared streets that is to be used exclusively by pedestrians, and not vehicles.[46] The tactile surfaces tested included raised truncated domes that, in the United States, are used as detectable warning surfaces on curb ramps and blended transitions to indicate the boundary between the pedestrian route and the vehicular route at pedestrian street crossings. Using detectable warning surfaces to facilitate wayfinding along shared streets would be expanding the use of such surfaces.

Question 22. The Access Board seeks information on the design of shared streets in the United States, and whether tactile surfaces or other design features are used to facilitate wayfinding along shared streets. The Access Board also seeks information about other research that is planned or underway on the use of tactile surfaces or other design features to facilitate wayfinding along shared streets.

Regulatory Process Matters

Executive Orders 12866 and 13563

The Office of Management and Budget has reviewed this proposed rule pursuant to Executive Orders 12866 and 13563.[47] The Access Board prepared a regulatory assessment of the potential costs and benefits of the proposed rule. The regulatory assessment is available on the Access Board website at: http://www.access-board.gov/prowac/index.htm, and is also available in the regulatory docket at http://www.regulations.gov. The information in the regulatory assessment is discussed in the preamble under Impacts on State and Local Governments and under the relevant requirements in the Section-by-Section Analysis. The information in the regulatory assessment is also summarized in the tables below, As indicated in the tables below, the regulatory assessment does not include estimates of the total annual costs for two of the requirements in the proposed guidelines that will have more than minimal impacts because information is not available to estimate the costs. Questions are included in the preamble seeking additional information to assist the Board to estimate the total annual costs of these two

46."Shared Space Delineators, Are They Detectable?" (2010) available at: http://www.tap.iht.org/objects_store/201004/TfL%20Report%2020100415.pdf. See also "Testing Proposed Delineators to Demarcate Pedestrian Paths in a Shared Space Environment, Report of Design Trials Conducted at University College London" (2008) available at: http://www.homezones.org.uk/public/downloads/news/Exec%20Summary%20&%20Full%20Report%20of%20design%20trials%20at%20UCL%20PAMELA%200108.pdf.

47. Executive Orders 12866 and 13563 establish and reaffirm principles of regulation that direct federal agencies among other things to: "(1) propose or adopt a regulation only upon a reasoned determination that its benefits justify its costs (recognizing that some benefits and costs are difficult to quantify); (2) tailor its regulations to impose the least burden on society, consistent with obtaining regulatory objectives, taking into account, among other things, and to the extent practicable, the costs of cumulative regulations; (3) select, in choosing among alternative regulatory approaches, those approaches that maximize net benefits (including potential economic, environmental, public health and safety, and other advantages; distributive impacts; and equity); (4) to the extent feasible, specify performance objectives, rather than specifying the behavior or manner of compliance that regulated entities must adopt; and (5) identify and assess available alternatives to direct regulation, including providing economic incentives to encourage the desired behavior, such as user fees or marketable permits, or providing information upon which choices can be made by the public." Executive Order 13563, section 1 (b).

requirements and to refine the cost estimates for the other requirements in the proposed guidelines. Consequently, the Access Board has not determined whether the proposed guidelines are an economically significant regulatory action.[48] The Access Board will analyze the information received in response to the questions in the preamble. When the final guidelines are issued, the Access Board will revise the regulatory assessment and determine whether the guidelines are an economically significant regulatory action.

Baseline

All state transportation departments and most local transportation departments maintain design manuals and standard drawings for improvements in the public right-of-way. The local transportation department design manuals and standard drawings are generally consistent with their state transportation department design manuals and standard drawings. State and local transportation departments use publications issued by the American Association of State and Highway Transportation Officials (AASHTO) in their design manuals and standard drawings, including the "Policy on Geometric Design of Highways and Streets" (2004) (commonly referred to as the "AASHTO Green Book") and the "Guide for the Planning, Design, and Operation of Pedestrian Facilities" (2004) which incorporate accessibility in the design of sidewalks and other pedestrian facilities.[49] The Federal Highway Administration as part of its stewardship and oversight responsibilities has also worked with state transportation departments to incorporate accessibility in their design manuals and standards drawings. The Federal Highway Administration has issued guidance that the accessibility standards in the Department of Justice regulations implementing Title II of the Americans with Disabilities Act and the Department of Transportation regulations implementing Section 504 are to be used to the extent feasible for the design of pedestrian facilities in the public right-of-way until new accessibility standards are adopted for these facilities.

In the absence of the proposed guidelines, the regulatory assessment assumes that state and local transportation departments will use the DOJ 2010 Standards in the Department of Justice regulations implementing Title II of the Americans with Disabilities Act to the extent feasible when designing, constructing, or altering pedestrian facilities in the public right-of-way, consistent with the guidance issued by the Federal Highway Administration, as well as other applicable standards and industry practices. An analysis of the proposed guidelines compared to the DOJ 2010 Standards, other applicable standards, and industry practices is included in the appendix to the regulatory assessment. The analysis identified four requirements in the proposed guidelines that will have more than minimal impacts on state and local transportation departments. The factors used to identify whether the requirements in the proposed guidelines will have more than minimal impacts are discussed in the regulatory assessment and in the preamble under Impacts on State and Local Governments. The four requirements in the proposed guidelines that will have more than minimal impacts on state and local transportation departments are summarized in the table below, along with a description of the

48. A regulatory action is economically significant if it is anticipated to "[h]ave an annual effect on the economy of $100 million or more" or to "adversely affect in a material way the economy, a sector of the economy, productivity, competition, jobs, the environment, public health or safety, or State, local, or tribal government communities." Executive Order 12866, section 2 (f) (1).
49. See footnote 20 for additional information on the AASHTO publications and accessibility.

governmental units affected by proposed requirements and questions in the preamble to the proposed guidelines that seek additional information on the governmental units affected.

Requirements in Proposed Guidelines That Will Have More Than Minimal Impacts on State and Local Transportation Departments

Requirement	Governmental Units Affected
Detectable warning surfaces required on newly constructed and altered curb ramps and blended transitions at pedestrian street crossings (R208.1 and R305)	Will affect state and local transportation departments that do not currently provide detectable warning surfaces on curb ramps All state transportation departments currently specify detectable warning surfaces on curb ramps in their standard drawings; most local transportation departments maintain standard drawings that are consistent with standard drawings maintained by their state transportation departments Questions 4, 5, and 6 in preamble seek information on state and local transportation departments that do not currently provide detectable warning surfaces on curb ramps
Accessible pedestrian signals and pushbuttons required when pedestrian signals newly installed or replaced at signalized intersections (R209)	Will affect state and local transportation departments that do not currently provide accessible pedestrian signals and pedestrian pushbuttons when pedestrian signals are newly installed or replaced at signalized intersections Some state and local transportation departments currently provide accessible pedestrian signals and pedestrian pushbuttons when pedestrian signals are newly installed or replaced at signalized intersections; TEA-21 (23 U.S.C. 217 (g)) directed that audible traffic signals be included in transportation plans and projects where appropriate Question 9 in preamble seeks information on state and local transportation departments that currently provide accessible pedestrian signals and pedestrian pushbuttons when pedestrian signals are newly installed or replaced at signalized intersections

Requirements in Proposed Guidelines That Will Have More Than Minimal Impacts on State and Local Transportation Departments

Requirement	Governmental Units Affected
Maximum cross slope of 2 percent required on pedestrian access routes, including within pedestrian street crossings with yield or stop control (R204.3 and R302.6)	Will affect state and local transportation departments that construct new tabled intersections in hilly urban areas which contain pedestrian street crossings with yield or stop control Question 14 in preamble seeks information on the current design policies and practices of state and local transportation departments with respect to tabling newly constructed intersections in hilly urban areas, particularly with respect to extending the tabling to pedestrian street crossings with yield or stop control
Pedestrian activated signals required at roundabouts with multi-lane pedestrian crossings (R206 and R306.3.2)	Will affect state and local transportation departments that construct new roundabouts with multi-lane pedestrian street crossings

The Access Board entered into an interagency agreement with the Volpe National Transportation Systems Center (Volpe Center) to gather data and prepare cost estimates for the regulatory assessment. The cost estimates prepared by the Volpe Center are summarized in the table below, along with questions in the preamble to the proposed guidelines that seek additional information to refine the cost estimates.

Estimated Total Annual Costs for Requirements That Will Have More Than Minimal Impacts on State and Local Transportation Departments

Requirement	Additional Costs Per Element or Facility Due to Requirement	Number of Elements or Facilities Constructed or Altered on Annual Basis	Total Annual Costs for Requirement
Detectable warning surfaces required on newly constructed and altered curb ramps and blended transitions at pedestrian street crossings (R208.1 and R305)	$48 to $240 for detectable warning materials for typical curb ramp Question 8 in preamble seeks additional information on costs for detectable warning materials and installation of the materials on typical curb ramp	No information available Question 7 in preamble seeks information on number of curb ramps that are constructed or altered on an annual basis in the public right-of-way	No estimate provided Total annual costs will depend on number of state and local transportation departments that do not currently provide detectable warning surfaces on curb ramps, and number of curb ramps that they construct or alter on an annual basis
Accessible pedestrian signals and pushbuttons required when pedestrian signals newly installed or replaced at signalized intersections (R209)	$3,600 per signalized intersection Question 10 in preamble seeks additional information on costs for providing accessible pedestrian signals and pedestrian pushbuttons at signalized intersections	Pedestrian signals newly installed or replaced at 13,095 signalized intersections on an annual basis	$47 million

Estimated Total Annual Costs for Requirements That Will Have More Than Minimal Impacts on State and Local Transportation Departments

Requirement	Additional Costs Per Element or Facility Due to Requirement	Number of Elements or Facilities Constructed or Altered on Annual Basis	Total Annual Costs for Requirement
Maximum cross slope of 2 percent required on pedestrian access routes, including within pedestrian street crossings with yield or stop control (R204.3 and R302.6)	$60,000 per tabled intersection Question 15 in preamble seeks additional information on costs to extend tabling of newly constructed intersections in hilly urban areas to pedestrian street crossings with yield or stop control	No information available Question 16 in preamble seeks information on number of tabled intersections which contain pedestrian street crossings with yield or stop control that are newly constructed in hilly urban areas on an annual basis	No estimate provided Total annual costs will depend on number of tabled intersections which contain pedestrian street crossings with yield or stop control that are newly constructed in hilly urban areas on an annual basis
Pedestrian activated signals required at roundabouts with multi-lane pedestrian crossings (R206 and R306.3.2)	$90,000 to $230,000 per roundabout Question 19 in preamble seeks additional information on costs to provide pedestrian activated signals at roundabouts with multi-lane pedestrian crossings	27 new roundabouts with multi-lane pedestrian street crossings constructed on an annual basis	$2.4 million to $6.2 million

Benefits

The proposed guidelines will benefit pedestrians with disabilities. The U.S. Census Bureau reports that 54.4 million Americans, about one in five U.S. residents, reported some level of disability in 2005.[50] The number of individuals with disabilities is almost equal to the combined total population of California and Florida. The U.S. Census Bureau provides this breakdown of the population of people aged 15 and older:

- 27.4 million (11.9 percent) had difficulty with ambulatory activities of the lower body;

50. "Americans with Disabilities: 2005" (2008) available on the web at: http://www.census.gov/prod/2008pubs/p70-117.pdf.

- 22.6 million people (9.8 percent) had difficulty walking a quarter of a mile;
- 21.8 million (9.4 percent) had difficulty climbing a flight of stairs;
- 10.2 million (4.4 percent) used a cane, crutches, or walker to assist with mobility;
- 3.3 million (1.4 percent) used a wheelchair or other wheeled mobility device; and
- 7.8 million (3 percent) had difficulty seeing words or letters in ordinary newspaper print, including 1.8 million who are completely unable to see.

Executive Order 13563 states that to the extent permitted by law federal agencies must "propose or adopt a regulation only upon a reasoned determination that its benefits justify its costs (recognizing that some benefits and costs are difficult to quantify)" and that "where appropriate and permitted by law, each agency may consider and (discuss qualitatively) values that are difficult or impossible to quantify, including equity, human dignity, fairness, and distributive impacts." The proposed guidelines promote important societal values that are difficult or impossible to quantify. As discussed above under the Need for Rulemaking, when enacting the Americans with Disabilities Act, Congress found "the discriminatory effects of architectural, transportation, and communication barriers" to be a continuing problem that "denies people with disabilities the opportunity to compete on an equal basis and to pursue those opportunities for which our free society is justifiably famous, and costs the United States billions of dollars in unnecessary expenses resulting from dependency and nonproductivity." 42 U.S.C. 12101 (a) (5) and (9). Congress declared that "the Nation's proper goals regarding individuals with disabilities are to assure equality of opportunity, full participation, independent living, and economic self-sufficiency." 42 U.S.C. 12101 (a) (8). The proposed guidelines promote the goals declared by Congress by eliminating the discriminatory effects of architectural, transportation, and communication barriers in the design and construction of pedestrian facilities in the public right-of-way. The proposed guidelines are also important to achieving the benefits of the other parts of the Americans with Disabilities Act. As the House Report for the Americans with Disabilities Act stated, "[t]he employment, transportation, and public accommodation sections . . . would be meaningless if people who use wheelchairs were not afforded the opportunity to travel on and between the streets." H.R. 485, 101st Cong., 2d Sess. 84 (1990).

Question 23. Comments are requested on whether the proposed guidelines have other quantitative or qualitative benefits in addition to those discussed above.

Regulatory Flexibility Act: Initial Regulatory Flexibility Analysis

The impacts of the proposed guidelines on small governmental jurisdictions with a population of less than 50,000 are discussed below. This information is required by the Regulatory Flexibility Act (5 U.S.C. §603).

Reasons for issuing proposed accessibility guidelines

The Access Board's current accessibility guidelines, the 2004 ADA and ABA Accessibility Guidelines, were developed primarily for buildings and facilities on sites. Some of the requirements in the 2004 ADA and ABA Accessibility Guidelines can be readily applied to pedestrian facilities in the public right-of-way, but other requirements need to be adapted for pedestrian facilities in the public right-of-way. The proposed guidelines are developed specifically for pedestrian facilities in the public right-of-way and address conditions and constraints that exist in the public right-of-way.

Objectives of, and legal basis for, proposed accessibility guidelines

The Access Board is required to issue accessibility guidelines by the Americans with Disabilities Act (42 U.S.C. §12204) and Section 502 of the Rehabilitation Act (29 U.S.C. §792) to ensure that newly constructed and altered facilities are readily accessible to and usable by pedestrians with disabilities.

Small governmental jurisdictions affected by proposed accessibility guidelines

The number of small governmental jurisdictions with a population less than 50,000 affected by the proposed guidelines is shown in the table below.

Governmental Jurisdictions	Population Less Than 50,000
County	2,178
Municipal	18,824
Town or Township	16,371
Total	37,375
Source: US Census Bureau 2002 Census of Governments available at: http://www.census.gov/prod/2003pubs/gc021x1.pdf.	

Almost 70 percent of municipal governments (13,038) and more than 75 percent of towns and townships (12,331) have a population of less than 2,500. Many of these small governmental jurisdictions are located in rural areas, which generally do not construct pedestrian transportation networks (e.g., sidewalks, pedestrian street crossings, and pedestrian signals).

Compliance requirements

The proposed accessibility guidelines address the design, construction, and alteration of pedestrian facilities in the public right-of-way, including sidewalks, pedestrian street crossings, pedestrian overpasses and underpasses, curb ramps and blended transitions at pedestrian street crossings, pedestrian signals, street furniture (i.e., drinking fountains, public toilet facilities, tables, counters, and benches), pedestrian signs, transit stops and transit shelters for buses and light rail vehicles, on-street parking that is marked or metered, and passenger loading zones. The Section-by-Section Analysis of the preamble describes the proposed accessibility guidelines. Compliance with the proposed accessibility guidelines is not mandatory until they are adopted, without or without additions and modifications, as accessibility standards by other federal agencies. There are no reporting or recordkeeping requirements.

Other federal rules

The Department of Justice, Department of Transportation, and General Services Administration are responsible for issuing accessibility standards that are consistent with the accessibility guidelines issued by the Access Board and are expected to conduct rulemaking to adopt the proposed guidelines, with or

without additions and modifications, as accessibility standards in regulations implementing Title II of the Americans with Disabilities Act (28 CFR part 36 and 49 CFR part 37), Section 504 of the Rehabilitation Act (49 CFR part 27), and the Architectural Barriers Act (41 CFR part 102). Additional information on these laws and regulations is provided under the Statutory and Regulatory Background in the preamble to the proposed guidelines.

Significant alternatives which minimize any significant economic impacts on small entities

The regulatory assessment analyzes the following four requirements in the proposed guidelines that will have more than minimal impacts on state and local transportation departments:

- Detectable warning surfaces required on newly constructed and altered curb ramps and blended transitions at pedestrian street crossings (see R208.1 and R305). Detectable warning surfaces consist of small truncated domes that are detectable underfoot. Where curb ramps or blended transitions are provided at pedestrian street crossings, detectable warning surfaces indicate the boundary between a pedestrian route and a vehicular route for pedestrians who are blind or have low vision in place of the missing curb.
- Accessible pedestrian signals and pedestrian pushbuttons required when pedestrian signals newly installed or replaced at signalized intersections (see R209). Accessible pedestrian signals and pedestrian pushbuttons communicate the information about the WALK and DON'T WALK intervals at signalized intersections in non-visual formats (i.e., audible tones and vibrotactile surfaces) to pedestrians who are blind or have low vision.
- Maximum cross slope of 2 percent required on pedestrian access routes, including within pedestrian street crossings with yield or stop control. Cross slope is the slope perpendicular to the direction of pedestrian travel. Cross slope impedes travel by pedestrians who use wheeled mobility devices since energy must be expended to counteract the perpendicular force of the cross slope. The 2 percent maximum cross slope required on pedestrian access routes has more than minimal impacts on the construction of new tabled intersections in hilly urban areas that contain pedestrian street crossings with yield or stop control where vehicles slow or stop before proceeding through the intersection.
- Pedestrian activated signals at roundabouts with multi-lane pedestrian street crossings. A roundabout is a circular intersection with yield control at entry, which permits a vehicle on the circulatory roadway to proceed, and with deflection of the approaching vehicle counter-clockwise around a central island. Pedestrian activated signals are required at roundabouts with multi-lane pedestrian street crossings to facilitate crossing by pedestrians who are blind or have low vision. Small governmental jurisdictions with a population less than 50,000 are not likely to construct roundabouts with multi-lane pedestrian street crossings and will not be affected by this requirement.

There are no significant alternatives that will minimize any significant impacts of these requirements on small governmental jurisdictions and achieve the objectives of the Americans with Disabilities Act, Section 504 of the Rehabilitation Act, and the Architectural Barriers Act to eliminate the discriminatory effects of architectural, transportation, and communication barriers in the design and construction of pedestrian facilities in the public right-of-way.

Executive Order 13132: Federalism

The proposed rule adheres to the fundamental federalism principles and policy making criteria in Executive Order 13132. The proposed rule is issued under the authority of the Americans with Disabilities Act, civil rights legislation that was enacted by Congress pursuant to its authority to enforce the Fourteenth Amendment to the U.S. Constitution and to regulate commerce. The Americans with Disabilities Act was enacted "to provide a clear and comprehensive national mandate for the elimination of discrimination against individuals with disabilities." 42 U.S.C. §12101 (b) (1). The Americans with Disabilities Act recognizes the authority of State and local governments to enact and enforce laws that "provide for greater or equal protection for the rights of individuals with disabilities than are afforded by this chapter." 42 U.S.C. §12201 (b). The proposed rule is based on the recommendations of a federal advisory committee which included representatives of state and local governments. The Access Board made drafts of the proposed rule available for public review and comment. State and local governments provided comments on the drafts of the proposed rule.

Unfunded Mandates Reform Act

The Unfunded Mandates Reform Act does not apply to proposed or final rules that enforce constitutional rights of individuals or enforce statutory rights that prohibit discrimination on the basis of race, color, sex, national origin, age, handicap, or disability. Since the proposed rule is issued under the Americans with Disabilities Act, which prohibits discrimination on the basis of disability, an assessment of the rule's effect on State, local, and tribal governments, and the private sector is not required by the Unfunded Mandates Reform Act.

List of Subjects in 36 CFR Part 1190

Buildings and facilities, Civil rights, Individuals with disabilities, Transportation.

_____

Nancy Starnes,

Chair.

For the reasons stated in the preamble, the Access Board proposes to add part 1190 to title 36 of the Code of Federal Regulations to read as follows:

PART 1190 –ACCESSIBILITY GUIDELINES FOR PEDESTRIAN FACILITIES IN THE PUBLIC RIGHT-OF-WAY

Sec.

1190.1 Accessibility guidelines.

Appendix to part 1190 – Accessibility Guidelines for Pedestrian Facilities in the Public Right-of-Way

Authority: 29 U.S.C. 792 and 42 U.S.C. 12204.

§ 1190.1 Accessibility Guidelines.

The accessibility guidelines for pedestrian facilities in the public right-of-way are set forth in the appendix to this part. When the guidelines are adopted, with or without additions and modifications, as accessibility standards in regulations issued by other federal agencies implementing the Americans with Disabilities Act, Section 504 of the Rehabilitation Act, and the Architectural Barriers Act, compliance with the accessibility standards is mandatory. A copy of the guidelines with figures is available on the Access Board website at: http://www.access-board.gov/prowac/nprm.htm. Except for the International Symbol of Accessibility in Figure R411, which is included in the appendix to this part, the figures are for illustration purposes only and do not establish requirements.

CHAPTER R1: APPLICATION AND ADMINISTRATION

R101 Purpose

R101.1 General. This document contains scoping and technical requirements to ensure that facilities for pedestrian circulation and use located in the public right-of-way are readily accessible to and usable by pedestrians with disabilities. Compliance with this document is mandatory when required by regulations issued by federal agencies that include accessibility standards for the design, construction, and alteration of pedestrian facilities in the public right-of-way.

> **Advisory R101.1 General.** Sections marked as "advisory" contain advisory information related to the preceding section. Advisory sections do not establish mandatory requirements. Some advisory sections reference related mandatory requirements to alert readers about those requirements.

R101.2 Effect on Existing Facilities. This document does not address existing facilities unless the facilities are included within the scope of an alteration undertaken at the discretion of a covered entity.

> **Advisory R101.2 Effect on Existing Facilities.** The Department of Justice regulations implementing Title II of the Americans with Disabilities Act contain requirements for state and local governments regarding program accessibility and existing facilities. See 28 CFR 35.150. The Department of Transportation regulations implementing Section 504 of the Rehabilitation Act also contain requirements for recipients of federal financial assistance from the Department regarding compliance planning. See 49 CFR 27.11 (c).

R102 Equivalent Facilitation. The use of alternative designs, products, or technologies that result in substantially equivalent or greater accessibility and usability than the requirements in this document is permitted.

R103 Conventions

R103.1 Conventional Industry Tolerances. Dimensions are subject to conventional industry tolerances except where dimensions are stated as a range.

> **Advisory R103.1 Conventional Industry Tolerances.** Conventional industry tolerances include tolerances for field conditions and tolerances that may be a necessary consequence of a particular manufacturing process. Conventional industry tolerances do not apply to design work.

R103.2 Calculation of Percentages. Where the required number of elements or facilities to be provided is determined by calculations of ratios or percentages and remainders or fractions result, the next greater whole number of such elements or facilities shall be provided. Where the determination of the required size or dimension of an element or facility involves ratios or percentages, rounding down for values less than one half is permitted.

Convention	Description
915 / 36	dimension showing International System of Units (in millimeters unless otherwise specified) above the line and US custumary units (in inches unless otherwise specified) below
150 / 6	dimension for small measurements
840-915 / 33-36	dimension showing a range with minimum - maximum
min	minimum
max	maximum
>	greater than
≥	greater than or equal to
<	less than
≤	less than or equal to
	boundary of clear floor space or maneuvering clearance
℄	centerline
	a permitted element or its extension
	direction of travel or approach
	a highlighted element in elevation or plan
	location zone of element, control or feature

Figure R103
Graphic Convention for Figures

R103.3 Units of Measurement. Measurements are stated in metric and U.S. customary units. The values stated in each system (metric and U.S. customary units) may not be exact equivalents, and each system shall be used independently of the other.

> **Advisory R103.3 Units of Measurement.** Users should work entirely within one system of measurement, either metric or U.S. customary units. Combining values from the two systems may result in non-compliance.

R104 Referenced Standards

R104.1 Incorporation by Reference. The specific editions of the standards listed in R104.2 are incorporated by reference in this document and are part of the requirements to the prescribed extent of each such reference. The Director of the Federal Register has approved the standards for incorporation by reference in accordance with 5 U.S.C. 552(a) and 1 CFR part 51. Copies of the referenced standards may be inspected at the Access Board, 1331 F Street, NW, Suite 1000, Washington, DC 20004; or at the National Archives and Records Administration (NARA). For information on the availability of the referenced standards at NARA, call (202) 741-6030, or go to: http://www.archives.gov/federal_register/code_of_federal_regulations/ibr_locations.html.

R104.2 MUTCD. The portions of the Manual on Uniform Traffic Control Devices for Streets and Highways (MUTCD), 2009 Edition, that are incorporated by reference in this document consist of definitions (see R105.2) and standard statements, as defined in section 1A.13 of the MUTCD (see R205, R209, and R306.3). Guidance, option, and support statements, as defined in section 1A.13 of the MUTCD, shall be used to assist in the interpretation of the standard statements. Where there are differences between this document and the referenced standards, this document applies. The MUTCD is available on the Federal Highway Administration website at http://mutcd.fhwa.dot.gov. Printed copies may be purchased from the American Association of State Highway and Transportation Officials, 444 N Capitol Street, NW, Washington, DC 20001 (http://www.transportation.org/).

> **Advisory R104.2 MUTCD.** MUTCD definitions and standard statements are referenced in the following sections of this document:
> - R105.2 references definitions in section 1A.13 of the MUTCD;
> - R205 references standard statements in sections 6D.01, 6D.02, 6G.05, 6F.63, 6F.68, and 6F.71 of the MUTCD for providing alternate pedestrian access routes when a pedestrian circulation path is temporarily closed;
> - R209 references standard statements in sections 4E.08 through 4E.13 of the MUTCD for accessible pedestrian signals and pedestrian pushbuttons; and
> - R306.2 references standard statements in section 4E.06 of the MUTCD for pedestrian signal phase timing.

R105 Definitions

R105.1 General. For the purpose of this document, the terms defined in R105.5 have the indicated meaning.

R105.2 Terms Defined in Referenced Standards. Terms used in specific sections of the MUTCD that are incorporated by reference in this document shall have the meaning specified in section 1A.13 of the MUTCD (incorporated by reference, see R104.2). In addition, the following terms shall have the meaning specified in section 1A.13 of the MUTCD (incorporated by reference, see R104.2): highway, intersection, island, median, pedestrian, roundabout, sidewalk, splitter island, and street.

R105.3 Undefined Terms. The meaning of terms not specifically defined in R105.5, the referenced standards, or regulations issued by Federal agencies that adopt this document as accessibility standards shall be as defined by collegiate dictionaries in the sense that the context implies.

R105.4 Interchangeability. Words, terms, and phrases used in the singular include the plural and those used in the plural include the singular.

R105.5 Defined Terms.

Accessible. Describes a facility in the public right-of-way that complies with this document.

Alteration. A change to a facility in the public right-of-way that affects or could affect pedestrian access, circulation, or use. Alterations include, but are not limited to, resurfacing, rehabilitation, reconstruction, historic restoration, or changes or rearrangement of structural parts or elements of a facility.

Blended Transition. A raised pedestrian street crossing, depressed corner, or similar connection between the pedestrian access route at the level of the sidewalk and the level of the pedestrian street crossing that has a grade of 5 percent or less.

Cross Slope. The grade that is perpendicular to the direction of pedestrian travel.

Curb Line. A line at the face of the curb that marks the transition between the curb and the gutter, street, or highway.

Curb Ramp. A ramp that cuts through or is built up to the curb. Curb ramps can be perpendicular or parallel, or a combination of parallel and perpendicular ramps.

Element. An architectural or mechanical component of a building, facility, space, site, or public right-of-way.

Facility. All or any portion of buildings, structures, improvements, elements, and pedestrian or vehicular routes located in the public right-of-way.

Grade Break. The line where two surface planes with different grades meet.

Operable Part. A component of an element used to insert or withdraw objects, or to activate, deactivate, or adjust the element.

Pedestrian Access Route. A continuous and unobstructed path of travel provided for pedestrians with disabilities within or coinciding with a pedestrian circulation path.

Pedestrian Circulation Path. A prepared exterior or interior surface provided for pedestrian travel in the public right-of-way.

Public Right-of-Way. Public land or property, usually in interconnected corridors, that is acquired for or dedicated to transportation purposes.

Qualified Historic Facility. A facility that is listed in or eligible for listing in the National Register of Historic Places, or designated as historic under an appropriate state or local law.

Running Slope. The grade that is parallel to the direction of pedestrian travel.

Vertical Surface Discontinuities. Vertical differences in level between two adjacent surfaces.

CHAPTER R2: SCOPING REQUIREMENTS

R201 Application

R201.1 Scope. All newly constructed facilities, altered portions of existing facilities, and elements added to existing facilities for pedestrian circulation and use located in the public right-of-way shall comply with the requirements in this document.

> **Advisory R201.1 Scope.** The requirements in this document are to be applied to all areas of a facility within the scope of the project. Where multiple features of the same type are provided, such as on-street parking spaces, and a percentage of the features are required to be accessible, only the required number of features must comply with the technical requirements in this document and be connected to a pedestrian access route. Where elements are provided on a site that is a designated portion of a public right-of-way, the elements are required to comply with the applicable requirements in this document instead of the requirements in the Americans with Disabilities Act Accessibility Guidelines for Buildings and Facilities and the Architectural Barriers Act Accessibility Guidelines (36 CFR part 1191).

R201.2 Temporary and Permanent Facilities. The requirements in this document shall apply to temporary and permanent facilities in the public right-of-way.

> **Advisory R201.2 Temporary and Permanent Facilities.** Temporary pedestrian circulation paths around work zones and portable public toilets are examples of temporary facilities in the public right-of-way that are covered by the requirements in this document.

R201.3 Buildings and Structures. Buildings and structures in the public right-of-way that are not covered by the requirements in this document shall comply with the applicable requirements in 36 CFR part 1191.

> **Advisory R201.3 Buildings and Structures.** Towers and temporary performance stages and reviewing stands are examples of structures that may be provided in the public right-of-way and are not covered by the requirements in this document. These structures are required to comply with the applicable requirements in the Americans with Disabilities Act Accessibility Guidelines for Buildings and Facilities and the Architectural Barriers Act Accessibility Guidelines (36 CFR part 1191).

R202 Alterations and Elements Added to Existing Facilities

R202.1 General. Alterations and elements added to existing facilities shall comply with R202. Where elements are altered or added and the pedestrian circulation path to the altered or added elements is not altered, the pedestrian circulation path is not required to comply with R204.

> **Advisory R202.1 General.** Where possible, added elements should be located on an existing pedestrian access route.

R202.2 Added Elements. Where elements are added to existing facilities, the added elements shall comply with the applicable requirements for new construction.

R202.3 Alterations. Where existing elements, spaces, or facilities are altered, each altered element, space, or facility within the scope of the project shall comply with the applicable requirements for new construction.

> **Advisory R202.3 Alterations.** The alteration of multiple elements or spaces within a facility may provide a cost-effective opportunity to make the entire facility or a significant portion of the facility accessible.

R202.3.1 Existing Physical Constraints. Where existing physical constraints make it impracticable for altered elements, spaces, or facilities to fully comply with the requirements for new construction, compliance is required to the extent practicable within the scope of the project. Existing physical constraints include, but are not limited to, underlying terrain, right-of-way availability, underground structures, adjacent developed facilities, drainage, or the presence of a notable natural or historic feature.

R202.3.2 Transitional Segments. Transitional segments of pedestrian access routes shall connect to existing unaltered segments of pedestrian circulation paths and shall comply with R302 to the extent practicable.

R202.3.3 Reduction in Access Prohibited. An alteration shall not decrease or have the effect of decreasing the accessibility of a facility or an accessible connection to an adjacent building or site below the requirements for new construction in effect at the time of the alteration.

> **Advisory R202.3.3 Reduction in Access Prohibited.** Sidewalk improvements that correct existing excessive cross slope should be carefully planned to avoid creating excessive slope in curb ramps or adding a step at existing building entrances. Solutions may include:
> - Split sidewalks that serve building entrances and street or highway at separate levels;
> - Sidewalks with greater cross slope along the curb and pedestrian access routes with lesser cross slope along building fronts;
> - Pedestrian access routes along the curb and ramped entrances to buildings.

R202.3.4 Alterations to Qualified Historic Facilities. Where the State Historic Preservation Officer or Advisory Council on Historic Preservation determines that compliance with a requirement would threaten or destroy historically significant features of a qualified historic facility, compliance shall be required to the extent that it does not threaten or destroy historically significant features of the facility.

Advisory R202.3.4 Alterations to Qualified Historic Facilities. Where there is a federal agency "undertaking", as defined in 36 CFR 800.16 (y), the requirements in section 106 of the National Historic Preservation Act (16 U.S.C. 470f) and 36 CFR part 800 apply. Location of a facility within an historic district by itself does not excuse compliance with the requirements in this document. The State Historic Preservation Officer or Advisory Council on Historic Preservation must determine that compliance would threaten or destroy historically significant features of the facility. Reproductions or replications of historic facilities are not qualified historic facilities.

R203 Machinery Spaces. Vaults, tunnels, and other spaces used by service personnel only for maintenance, repair, or monitoring are not required to comply with this document.

R204 Pedestrian Access Routes

R204.1 General. Pedestrian access routes shall be provided in accordance with R204 and shall comply with R302.

Advisory R204.1 General. The Federal Highway Administration (FHWA) has issued guidance on the obligations of state and local governments to keep pedestrian access routes open and usable throughout the year, including snow and debris removal. The guidance is available at FHWA's website: http://www.fhwa.dot.gov/civilrights/programs/ada_sect504qa.htm.

R204.2 Sidewalks. A pedestrian access route shall be provided within sidewalks and other pedestrian circulation paths located in the public right-of-way. The pedestrian access route shall connect to accessible elements, spaces, and facilities required by this document and to accessible routes required by section 206.2.1 of appendix B to 36 CFR part 1191 or section F206.2.1 of appendix C to 36 CFR 1191 that connect building and facility entrances to public streets and sidewalks.

Advisory R204.2 Sidewalks. The accessible elements, spaces, and facilities located in the public right-of-way that pedestrian access routes must connect to include accessible pedestrian signals and pedestrian pushbuttons (see R209), street furniture (see R212), boarding and alighting areas and boarding platforms at transit stops (see R213 and R308.1.3.2), transit shelters (see R213 and R308.2), accessible on-street parking spaces (see R214 and R309), parking meters and parking pay stations serving accessible parking spaces (see R309.5), and accessible passenger loading zones (see R215 and R310).

R204.3 Pedestrian Street Crossings. A pedestrian access route shall be provided within pedestrian street crossings, including medians and pedestrian refuge islands, and pedestrian at-grade rail crossings. The pedestrian access route shall connect departure and arrival sidewalks.

R204.4 Pedestrian Overpasses and Underpasses. A pedestrian access route shall be provided within overpasses, underpasses, bridges, and similar structures that contain pedestrian circulation paths. Where an overpass, underpass, bridge, or similar structure is designed for pedestrian use only and the approach slope to the structure exceeds 5 percent, a ramp, elevator, limited use/limited application

elevator, or platform lift shall be provided. Elevators and platform lifts shall be unlocked during the operating hours of the facility served.

> **Advisory R204.4 Pedestrian Overpasses and Underpasses.** Where an overpass, underpass, bridge, or similar structure is designed for both pedestrian and vehicle use and the pedestrian access route is contained within the street or highway right-of-way, the grade of the pedestrian access route must not exceed the general grade established for the adjacent street or highway (see R302.5). Where the pedestrian access route is not contained within the street or highway right-of-way, the grade of the pedestrian access route must be 5 percent maximum (see R302.5). Where pedestrian overpasses or underpasses provide an alternative pedestrian circulation path to street level crossings, both the pedestrian overpass or underpass and the street level crossing must contain a pedestrian access route. State and local governments can provide a ramp, elevator, or lift at overpasses and underpasses designed for pedestrian use only. Long ramps present difficulties for some pedestrians with disabilities and can require snow clearance. Elevators or lifts can require maintenance.

R205 Alternate Pedestrian Access Routes. When a pedestrian circulation path is temporarily closed by construction, alterations, maintenance operations, or other conditions, an alternate pedestrian access route complying with sections 6D.01, 6D.02, and 6G.05 of the MUTCD (incorporated by reference, see R104.2) shall be provided. Where provided, pedestrian barricades and channelizing devices shall comply with sections 6F.63, 6F.68, and 6F.71 of the MUTCD (incorporated by reference, see R104.2).

> **Advisory R205 Alternate Pedestrian Access Routes.** Section 6G.05 of the MUTCD recommends that whenever possible work should be done in a manner that does not create a need to detour pedestrians from existing pedestrian routes. Extra distance and additional pedestrian street crossings add complexity to a trip and increase exposure of risk to accidents. Sections 6D.01and 6G.05 of the MUTCD require alternate pedestrian routes to be accessible and detectable, including warning pedestrians who are blind or have low vision about sidewalk closures. Proximity-actuated audible signs are a preferred means to warn pedestrians who are blind or have low vision about sidewalk closures.

R206 Pedestrian Street Crossings. Pedestrian street crossings shall comply with R306**.**

> **Advisory R206 Pedestrian Street Crossings.** All pedestrian street crossings must be accessible to pedestrians with disabilities. If pedestrian crossing is prohibited at certain locations, “No Pedestrian Crossing” signs should be provided along with detectable features, such as grass strips, landscaping, planters, chains, fencing, railings, or other barriers.

R207 Curb Ramps and Blended Transitions

R207.1 General. A curb ramp, blended transition, or a combination of curb ramps and blended transitions complying with R304 shall connect the pedestrian access routes at each pedestrian street

crossing. The curb ramp (excluding any flared sides) or blended transition shall be contained wholly within the width of the pedestrian street crossing served.

R207.2 Alterations. In alterations where existing physical constraints prevent compliance with R207.1, a single diagonal curb ramp shall be permitted to serve both pedestrian street crossings.

R208 Detectable Warning Surfaces

R208.1 Where Required. Detectable warning surfaces complying with R305 shall be provided at the following locations on pedestrian access routes and at transit stops:

1. Curb ramps and blended transitions at pedestrian street crossings;
2. Pedestrian refuge islands;
3. Pedestrian at-grade rail crossings not located within a street or highway;
4. Boarding platforms at transit stops for buses and rail vehicles where the edges of the boarding platform are not protected by screens or guards; and
5. Boarding and alighting areas at sidewalk or street level transit stops for rail vehicles where the side of the boarding and alighting areas facing the rail vehicles is not protected by screens or guards.

Advisory R208.1 Where Required. On pedestrian access routes, detectable warning surfaces indicate the boundary between pedestrian and vehicular routes where there is a flush rather than a curbed connection. Detectable warning surfaces should not be provided at crossings of residential driveways since the pedestrian right-of-way continues across residential driveway aprons. However, where commercial driveways are provided with yield or stop control, detectable warning surfaces should be provided at the junction between the pedestrian route and the vehicular route. Where pedestrian at-grade rail crossings are located within a street or highway, detectable warning surfaces at the curb ramps or blended transitions make a second set of detectable warning surfaces at the rail crossing unnecessary.

Detectable warning surfaces are not intended to provide wayfinding for pedestrians who are blind or have low vision. Wayfinding can be made easier by:

- Sidewalks that provide a clear path free of street furniture;
- Visual contrast between walking and non-walking areas (e.g., planted borders);
- Route edges that are clear and detectable by cane;
- Direct pedestrian street crossings and curb ramps that are in-line with direction of travel;
- Small corner radiuses that permit pedestrian street crossings to be as short and direct as possible;
- Orthogonal intersections that facilitate navigation using parallel and perpendicular vehicle sound cues;
- and barriers where pedestrian travel or crossing is not permitted.

R208.2 Where Not Required. Detectable warning surfaces are not required at pedestrian refuge islands that are cut-through at street level and are less than 1.8 meters (6.0 ft) in length in the direction of pedestrian travel.

Advisory R208.2 Where Not Required. Detectable warning surfaces are not required at cut-through pedestrian refuge islands that are less than 1.8 meters (6.0 ft) in length because detectable warning surfaces must extend 610 millimeters (2.0 ft) minimum on each side of the island and be separated by 610 millimeters (2.0 ft) minimum length of island without detectable warning surfaces (see R305.1.4 and R305.2.4). Installing detectable warning surfaces at cut-through pedestrian islands that are less than 1.8 meters (6.0 ft) in length would compromise the effectiveness of detectable warning surfaces. Where a cut-through pedestrian refuge island is less than 1.8 m (6.0 ft) in length and the pedestrian street crossing is signalized, the signal should be timed for a complete crossing of the street.

R209 Accessible Pedestrian Signals and Pedestrian Pushbuttons

R209.1 General. Where pedestrian signals are provided at pedestrian street crossings, they shall include accessible pedestrian signals and pedestrian pushbuttons complying with sections 4E.08 through 4E.13 of the MUTCD (incorporated by reference, see R104.2). Operable parts shall comply with R403.

Advisory R209 Accessible Pedestrian Signals and Pedestrian Pushbuttons. An accessible pedestrian signal and pedestrian pushbutton is an integrated device that communicates information about the WALK and DON'T WALK intervals at signalized intersections in non-visual formats (i.e., audible tones and vibrotactile surfaces) to pedestrians who are blind or have low vision.

R209.2 Alterations. Existing pedestrian signals shall comply with R209.1 when the signal controller and software are altered, or the signal head is replaced.

R210 Protruding Objects. Objects along or overhanging any portion of a pedestrian circulation path shall comply with R402 and shall not reduce the clear width required for pedestrian access routes.

Advisory R210 Protruding Objects. Protruding objects can be hazardous for pedestrians, especially pedestrians who are blind or have low vision. The requirements for protruding objects in R402 apply across the entire width of the pedestrian circulation path, not just the pedestrian access route. In addition, objects must not reduce the clear width required for pedestrian access routes. State and local governments must comply with the requirements for protruding objects and maintain the clear width of pedestrian access routes when installing or permitting the installation of street furniture on sidewalks, including street lights, utility poles and equipment cabinets, sign posts and signs, parking meters, trash receptacles, public telephones, mailboxes, newspaper vending machines, benches, transit shelters, kiosks, bicycle racks, planters and planted trees, and street sculptures. The American Association of State Highway and Transportation Officials (AASHTO) recommends that local governments use an encroachment permit process to regulate the use of sidewalks by private entities for activities such as outdoor dining, vending carts and stands, and street fairs in order to control protruding objects and maintain the clear width of pedestrian access routes. See AASHTO, Guide for the Planning, Design, and Operation of Pedestrian Facilities (2004), section 3.2.3.

R211 Signs

R211.1 General. Signs shall comply with R211. Where audible sign systems and other technologies are used to provide information equivalent to the information contained on pedestrian signs and transit signs, the signs are not required to comply with R211.2 and R211.3.

Advisory R211.1 General. Audible sign systems and other technologies that provide information equivalent to the information contained on signs are more usable by pedestrians who are blind or have low vision. Remote infrared audible signs that transmit information to portable devices that are carried by and audible only to the user are an example of audible sign systems and other technologies.

R211.2 Pedestrian Signs. Signs, other than transit signs, that provide directions, warnings, or other information for pedestrians only shall comply with R410.

Advisory R211.2 Pedestrian Signs. Pedestrian route signs along an historic trail, sidewalk closure and pedestrian detour signs, and tourist information signs are examples of signs that provide directions, warnings, or other information for pedestrians only. Signs provided for motorists and pedestrians such as highway and street name signs are not required to comply with R410.

R211.3 Transit Signs. Signs that identify the routes served by transit stops shall comply with R410.

Advisory R211.3 Transit Signs. Transit schedules, timetables, and maps are not required to comply with R410.

R211.4 Accessible Parking Space and Passenger Loading Zone Signs. Accessible parking spaces and accessible passenger loading zones shall be identified by signs displaying the International Symbol

of Accessibility complying with R411. At accessible parallel parking spaces and accessible passenger loading zones, the signs shall be located at the head or foot of the parking space or passenger loading zone.

R212 Street Furniture

R212.1 General. Where provided, street furniture shall comply with the applicable requirements in R212.

R212.2 Drinking Fountains. Drinking fountains shall comply with sections 602.1 through 602.6 of Appendix D to 36 CFR part 1191.

R212.3 Public Toilet Facilities. Public toilet facilities shall comply with sections 206.2.4 and 603 of Appendix D to 36 CFR part 1191. At least one fixture of each type provided shall comply with sections 604 through 610 of Appendix D to 36 CFR part 1191. Where multiple single-user public toilet facilities are clustered at a single location, at least 5 percent, but no less than one, of single-user toilets at each cluster shall comply with R212.3 and shall be identified by the International Symbol of Accessibility complying with R411.

R212.4 Tables. At least 5 percent, but no less than one, of tables at each location shall comply with section 902 of Appendix D to 36 CFR part 1191.

R212.5 Counters. Counters shall comply with section 904 of Appendix D to 36 CFR part 1191.

R212.6 Benches. At least 50 percent, but no less than one, of benches at each location shall provide clear space complying with R404 adjacent to the bench. The clear space shall be located either at one end of the bench or shall not overlap the area within 460 mm (1.5 ft) from the front edge of the bench. Benches at tables are not required to comply.

> **Advisory R212.6 Benches.** Benches that provide full back support and armrests to assist in sitting and standing are more usable by pedestrians with disabilities.

R213 Transit Stops and Transit Shelters. Where provided, transit stops and transit shelters shall comply with R308.

> **Advisory R213 Transit Stops and Transit Shelters.** Transit stops in the public right-of-way typically serve fixed route bus systems, including bus rapid transit systems, and light rail transit systems. Signs that identify the routes served by the transit stop must comply with the technical requirements for visual characters on signs unless audible sign systems or other technologies are used to provide the information (see R211 and R410). The Federal Highway Administration (FHWA) has issued guidance on the obligations of state transportation departments, metropolitan planning organizations, and transit agencies to coordinate the planning and funding of accessibility improvements to transit systems and facilities. The guidance is available at FHWA's website: http://www.fhwa.dot.gov/civilrights/memos/ada_memo_clarificationa.htm.

R214 On-Street Parking Spaces. Where on-street parking is provided on the block perimeter and the parking is marked or metered, accessible parking spaces complying with R309 shall be provided in accordance with Table R214. Where parking pay stations are provided and the parking is not marked, each 6.1 m (20.0 ft) of block perimeter where parking is permitted shall be counted as one parking space.

Table R214 On-Street Parking Spaces

Total Number of Marked or Metered Parking Spaces on the Block Perimeter	Minimum Required Number of Accessible Parking Spaces
1 to 25	1
26 to 50	2
51 to 75	3
76 to 100	4
101 to 150	5
151 to 200	6
201 and over	4 percent of total

Advisory R214 On-Street Parking Spaces. The MUTCD contains provisions for marking on-street parking spaces (see section 3B.19). Metered parking includes parking metered by parking pay stations. Where parking on part of the block perimeter is altered, the minimum number of accessible parking spaces required is based on the total number of marked or metered parking spaces on the block perimeter.

R215 Passenger Loading Zones. Where passenger loading zones other than transit stops are provided, at least one accessible passenger loading zone complying with R310 shall be provided for each 30 m (100.0 ft) of continuous loading zone space or fraction thereof.

R216 Stairways and Escalators. Where provided on pedestrian circulation paths, stairways shall comply with R408 and escalators shall comply with section 810.9 of Appendix D to 36 CFR part 1191. Stairways and escalators shall not be part of a pedestrian access route.

R217 Handrails. Where provided on pedestrian circulation paths, handrails shall comply with R409.

R218 Doors, Doorways, and Gates. Where provided at pedestrian facilities, doors, doorways, and gates shall comply with section 404 of Appendix D to 36 CFR part 1191.

Advisory R218 Doors, Doorways, and Gates. Enclosed transit shelters are an example of pedestrian facilities where doors and doorways are provided.

CHAPTER R3: TECHNICAL REQUIREMENTS

R301 General

R301.1 Scope. The technical requirements in Chapter 3 shall apply where required by Chapter 2 or where referenced by a requirement in this document.

R302 Pedestrian Access Routes

R302.1 General. Pedestrian access routes shall comply with R302.

R302.2 Components. Pedestrian access routes shall consist of one or more of the following components:

1. Sidewalks and other pedestrian circulation paths, or a portion of sidewalks and other pedestrian circulation paths, complying with R302.3 through R302.7;
2. Pedestrian street crossings and at-grade rail crossings complying with R302.3 through R302.7, and R306;
3. Pedestrian overpasses and underpasses and similar structures complying with R302.3 through R302.7;
4. Curb ramps and blended transitions complying with R302.7 and R304;
5. Ramps complying with R407;
6. Elevators and limited use/limited application elevators complying with sections 407 or 408 of Appendix D to 36 CFR part 1191;
7. Platform lifts complying with section 410 of Appendix D to 36 CFR part 1191; and
8. Doors, doorways, and gates complying with section 404 of Appendix D to 36 CFR part 1191.

> **Advisory R302.2 Components.** The technical requirement for elevators, limited use/ limited application elevators, platform lifts, and doors, doorways, and gates are contained in the Americans with Disabilities Act Accessibility Guidelines for Buildings and Facilities and the Architectural Barriers Act Accessibility Guidelines (36 CFR part 1191).

R302.3 Continuous Width. Except as provided in R302.3.1, the continuous clear width of pedestrian access routes shall be 1.2 m (4.0 ft) minimum, exclusive of the width of the curb.

> **Advisory R302.3 Continuous Width.** The continuous clear width requirements in R302.3 apply to sidewalks and other pedestrian circulation paths, pedestrian street crossings and at-grade rail crossings, and pedestrian overpasses and underpasses and similar structures (see R302.2). Clear width requirements are contained in R304.5.1 for curb ramps and blended transitions, and in R407.4 for ramps. Where sidewalks are wider than 1.2 m (4.0 ft), only a portion of the sidewalk is required to comply with the requirements in R302.3 through R302.7. Additional maneuvering space should be provided at turns or changes in direction, transit stops, recesses and alcoves, building entrances, and along curved or angled routes, particularly where the grade exceeds 5 percent. R210 prohibits street furniture and other objects from reducing the minimum clear width of pedestrian access routes.

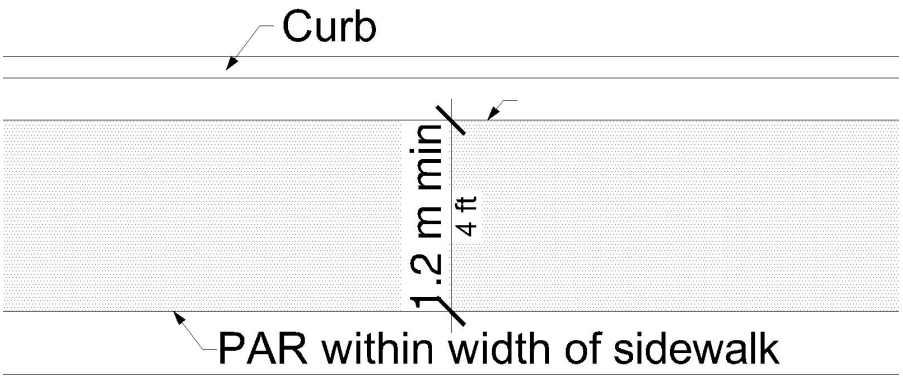

Figure R302.3
Continous Width

R302.3.1 Medians and Pedestrian Refuge Islands. The clear width of pedestrian access routes within medians and pedestrian refuge islands shall be 1.5 m (5.0 ft) minimum.

R302.4 Passing Spaces. Where the clear width of pedestrian access routes is less than 1.5 m (5.0 ft), passing spaces shall be provided at intervals of 61 m (200.0 ft) maximum. Passing spaces shall be 1.5 m (5.0 ft) minimum by 1.5 m (5.0 ft) minimum. Passing spaces are permitted to overlap pedestrian access routes.

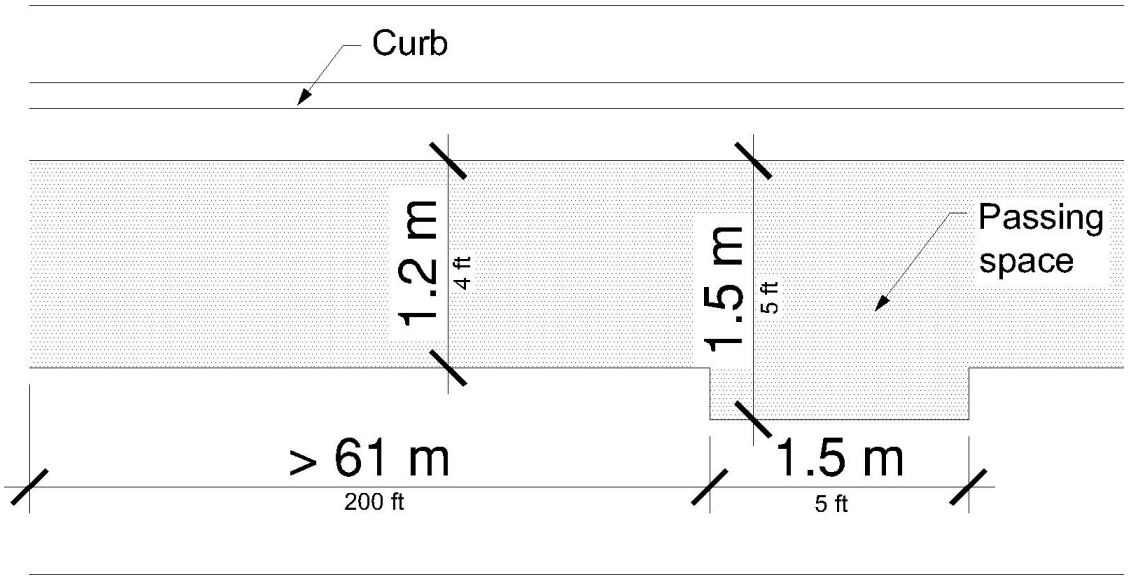

Figure R302.4
Passing Spaces

R302.5 Grade. Except as provided in R302.5.1, where pedestrian access routes are contained within a street or highway right-of-way, the grade of pedestrian access routes shall not exceed the general grade established for the adjacent street or highway. Where pedestrian access routes are not contained within a street or highway right-of-way, the grade of pedestrian access routes shall be 5 percent maximum.

> **Advisory R302.5 Grade.** The grade requirements in R302.5 apply to sidewalks and other pedestrian circulation paths, pedestrian street crossings and at-grade rail crossings, and pedestrian overpasses and underpasses and similar structures (see R302.2). The grade of the pedestrian access route is measured parallel to the direction of pedestrian travel. Running slope requirements are contained in R304.2.2 for perpendicular curb ramps, in R304.3.2 for parallel curb ramps, in R304.4.1 for blended transitions, and in R407.2 for ramps.

R302.5.1 Pedestrian Street Crossings. Where pedestrian access routes are contained within pedestrian street crossings, the grade of the pedestrian access route shall be 5 percent maximum.

R302.6 Cross Slope. Except as provided in R302.6.1 and R302.6.2, the cross slope of pedestrian access routes shall be 2 percent maximum.

> **Advisory R302.6 Cross Slope.** The cross slope requirements in R302.6 apply to sidewalks and other pedestrian circulation paths, pedestrian street crossings and at-grade rail crossings, and pedestrian overpasses and underpasses and similar structures (see R302.2). The cross slope of the pedestrian access route is measured perpendicular to the direction of pedestrian travel. Cross slope requirements are contained in R304.5.3 for curb ramps and blended transitions, and in R407.3 for ramps.

R302.6.1 Pedestrian Street Crossings Without Yield or Stop Control. Where pedestrian access routes are contained within pedestrian street crossings without yield or stop control, the cross slope of the pedestrian access route shall be 5 percent maximum.

> **Advisory R302.6.1 Pedestrian Street Crossings Without Yield or Stop Control.** Pedestrian street crossings without yield or stop control are crossings where there is no yield or stop sign, or where there is a traffic signal that is designed for the green phase. At pedestrian street crossings without yield or stop control, vehicles can proceed through the intersection without slowing or stopping. Where pedestrian access routes are contained within pedestrian street crossings with yield or stop control, the cross slope of the pedestrian access route must be 2 percent maximum (see R302.6). At pedestrian street crossings with yield or stop control, vehicles slow or stop before proceeding through the intersection.

R302.6.2 Midblock Pedestrian Street Crossings. Where pedestrian access routes are contained within midblock pedestrian street crossings, the cross slope of the pedestrian access route shall be permitted to equal the street or highway grade.

R302.7 Surfaces. The surfaces of pedestrian access routes and elements and spaces required to comply with R302.7 that connect to pedestrian access routes shall be firm, stable, and slip resistant and shall comply with R302.7.

Advisory R302.7 Surfaces. The surface requirements in R302.7 apply to sidewalks and other pedestrian circulation paths, pedestrian street crossings and at-grade rail crossings, pedestrian overpasses and underpasses and similar structures, and curb ramps and blended transitions (see R302.2). The surface requirements in R302.7 also apply to surfaces at the following accessible elements and spaces that connect to pedestrian access routes:

- Clear spaces (see R404.2), including clear spaces at operable parts (see R403.2) such as accessible pedestrian signals and pedestrian pushbuttons (see R209), clear spaces at street furniture such as benches (see R212.6), and clear spaces within transit shelters (see R308.2);
- Boarding and alighting areas and boarding platforms at transit stops (see R308.1.3.1);
- Access aisles at accessible parking spaces (see R309.2.1 and R309.3) and accessible passenger loading zones (see R310.3.4); and ramp runs and landings (see R407.7).

R302.7.1 Vertical Alignment. Vertical alignment shall be generally planar within pedestrian access routes (including curb ramp runs, blended transitions, turning spaces, and gutter areas within pedestrian access routes) and surfaces at other elements and spaces required to comply with R302.7 that connect to pedestrian access routes. Grade breaks shall be flush. Where pedestrian access routes cross rails at grade, the pedestrian access route surface shall be level and flush with the top of rail at the outer edges of the rails, and the surface between the rails shall be aligned with the top of rail.

Advisory R302.7.1 Vertical Alignment. Pedestrian access route surfaces must be generally planar and smooth. Surfaces should be chosen for easy rollability. Surfaces that are heavily textured, rough, or chamfered and paving systems consisting of individual units that cannot be laid in plane will greatly increase rolling resistance and subject pedestrians who use wheelchairs, scooters, and rolling walkers to the stressful and often painful effects of vibration. Such materials should be reserved for borders and decorative accents located outside of or only occasionally crossing the pedestrian access route. Surfaces should be designed, constructed, and maintained according to appropriate industry standards, specifications, and recommendations for best practice.

R302.7.2 Vertical Surface Discontinuities. Vertical surface discontinuities shall be 13 mm (0.5 in) maximum. Vertical surface discontinuities between 6.4 mm (0.25 in) and 13 mm (0.5 in) shall be beveled with a slope not steeper than 50 percent. The bevel shall be applied across the entire vertical surface discontinuity.

Advisory R302.7.2 Vertical Surface Discontinuities. The allowance for vertical surface discontinuities is for occasional expansion joints and objects such as utility covers, vault frames, and gratings that cannot be located in another portion of the sidewalk outside the pedestrian access route. However, objects such as utility covers, vault frames, and gratings should not be located on curb ramp runs, blended transitions, turning spaces, or gutter areas within the pedestrian access route. This may not always be possible in alterations, but should be avoided wherever possible. Vertical surface discontinuities between unit pavers should be minimized.

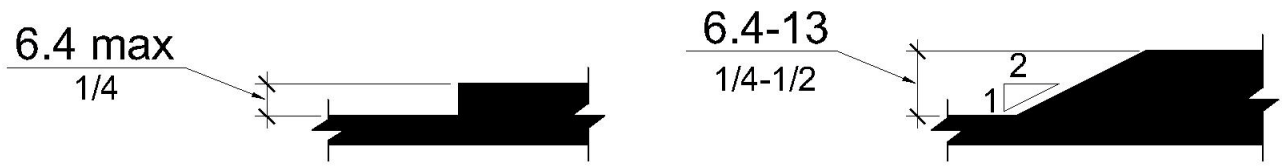

Figure R302.7.2
Vertical Surface Discontinuities

R302.7.3 Horizontal Openings. Horizontal openings in gratings and joints shall not permit passage of a sphere more than 13 mm (0.5 in) in diameter. Elongated openings in gratings shall be placed so that the long dimension is perpendicular to the dominant direction of travel.

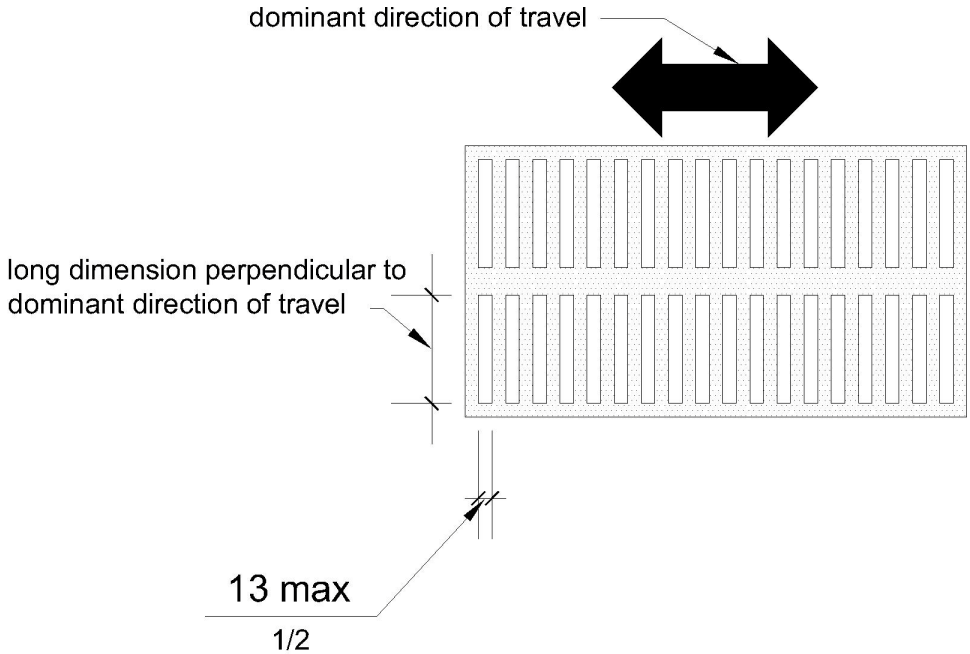

Figure R302.7.3
Horizontal Openings

R302.7.4 Flangeway Gaps. Flangeway gaps at pedestrian at-grade rail crossings shall be 64 mm (2.5 in) maximum on non-freight rail track and 75 mm (3 in) maximum on freight rail track.

> **Advisory R302.7.4 Flangeway Gaps**. Flangeway gaps are necessary to allow the passage of train wheel flanges. Flangeway gaps pose a potential hazard to pedestrians who use wheelchairs because the gaps can entrap the wheelchair casters.

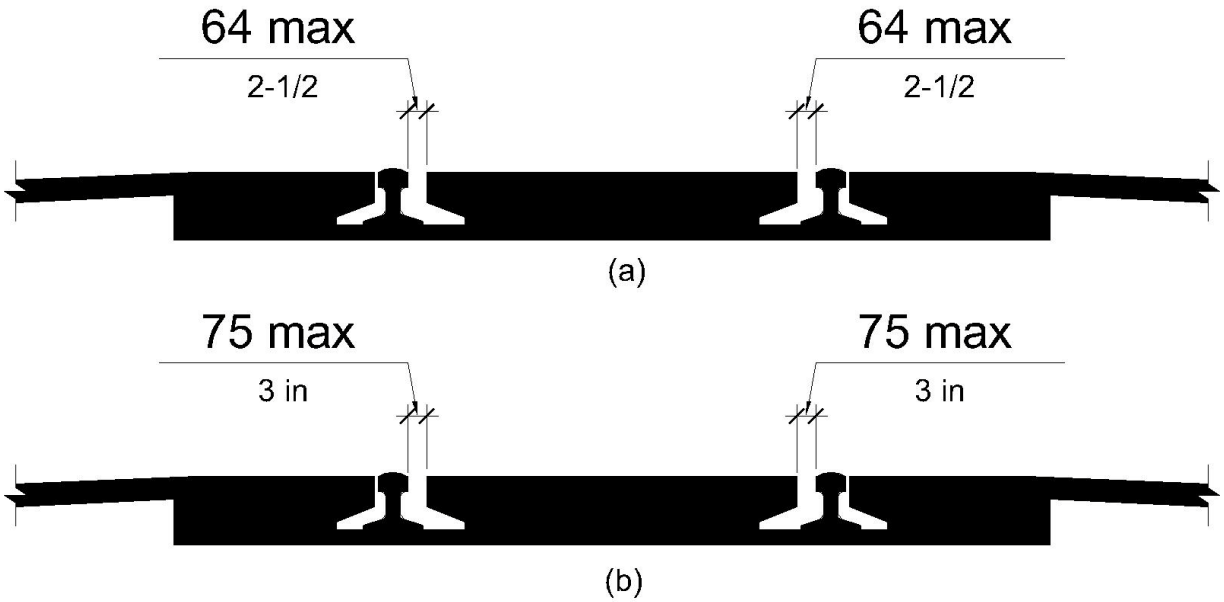

Figure R302.7.4
Flangeway Gaps

R303 Alternate Pedestrian Access Routes (See R205)

R304 Curb Ramps and Blended Transitions

R304.1 General. Curb ramps and blended transitions shall comply with R304.

> **Advisory R304.1 General.** There are two types of curb ramps:
> - Perpendicular curb ramps have a running slope that cuts through or is built up to the curb at right angles or meets the gutter break at right angles where the curb is curved. On large corner radiuses, it will be necessary to indent the gutter break on one side of the curb ramp in order for the curb ramp to meet the gutter break at right angles.
> - Parallel curb ramps have a running slope that is in-line with the direction of sidewalk travel and lower the sidewalk to a level turning space where a turn is made to enter the pedestrian street crossing.

Advisory R304.1 General (continued). Perpendicular curb ramps can be provided where the sidewalk is at least 3.7 m (12.0 ft) wide. Parallel curb ramps can be provided where the sidewalk is at least 1.2 m (4.0 ft) wide. Parallel and perpendicular curb ramps can be combined. A parallel curb ramp is used to lower the sidewalk to a mid-landing and a short perpendicular curb ramp connects the landing to the street. Combination curb ramps can be provided where the sidewalk is at least 1.8 m (6.0 ft) wide.

Blended transitions are raised pedestrian street crossings, depressed corners, or similar connections between pedestrian access routes at the level of the sidewalk and the level of the pedestrian street crossing that have a grade of 5 percent or less. Blended transitions are suitable for a range of sidewalk conditions.

R304.2 Perpendicular Curb Ramps. Perpendicular curb ramps shall comply with R304.2 and R304.5.

R304.2.1 Turning Space. A turning space 1.2 m (4.0 ft) minimum by 1.2 m (4.0 ft) minimum shall be provided at the top of the curb ramp and shall be permitted to overlap other turning spaces and clear spaces. Where the turning space is constrained at the back-of-sidewalk, the turning space shall be 1.2 m (4.0 ft) minimum by 1.5 m (5.0 ft) minimum. The 1.5 m (5.0 ft) dimension shall be provided in the direction of the ramp run.

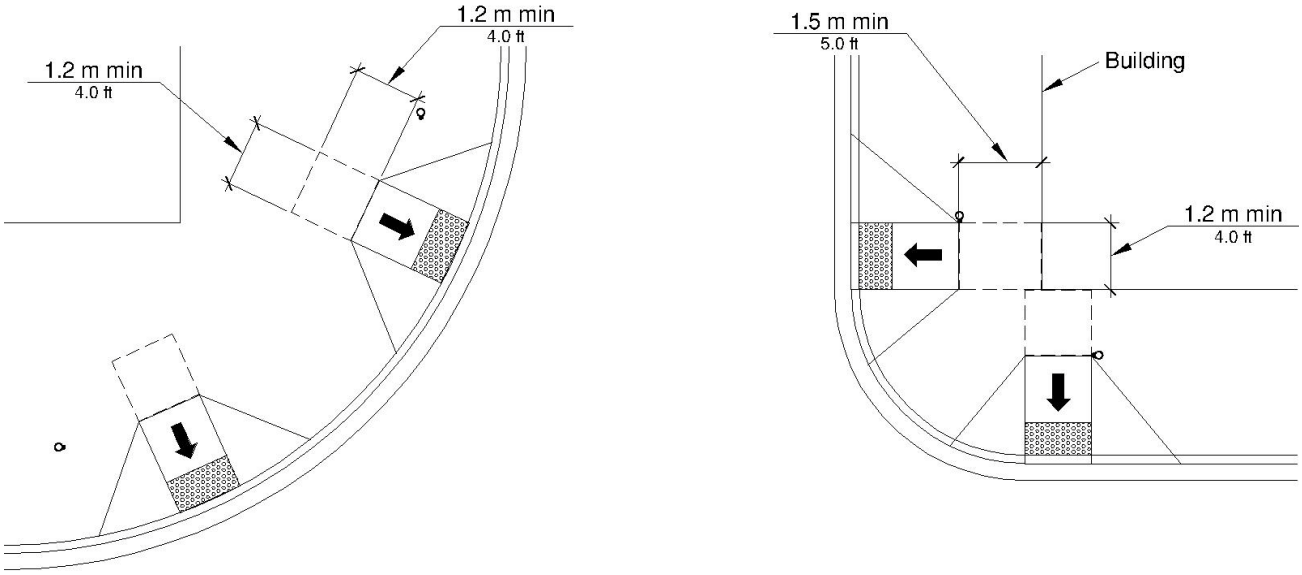

Figure R304.2.1
Turning Space

R304.2.2 Running Slope. The running slope of the curb ramp shall cut through or shall be built up to the curb at right angles or shall meet the gutter grade break at right angles where the curb is curved. The running slope of the curb ramp shall be 5 percent minimum and 8.3 percent maximum but shall not require the ramp length to exceed 4.5 m (15.0 ft). The running slope of the turning space shall be 2 percent maximum.

R304.2.3 Flared Sides. Where a pedestrian circulation path crosses the curb ramp, flared sides shall be sloped 10 percent maximum, measured parallel to the curb line.

> **Advisory R304.2.3 Flared Sides.** The flared sides are part of the pedestrian circulation path, but are not part of the pedestrian access route. Curb ramps whose sides have returned curbs provide useful directional cues where they are aligned with the pedestrian street crossing and are protected from cross travel by landscaping, street furniture, chains, fencing, or railings.

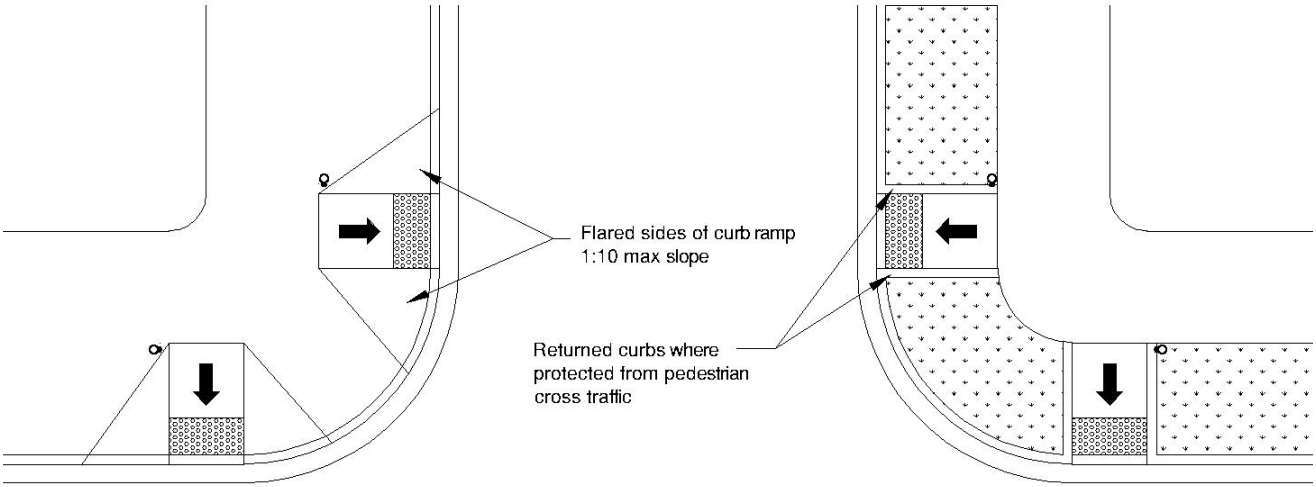

Figure R304.2.3
Flared Sides

R304.3 Parallel Curb Ramps. Parallel curb ramps shall comply with R304.3 and R304.5.

R304.3.1 Turning Space. A turning space 1.2 m (4.0 ft) minimum by 1.2 m (4.0 ft) minimum shall be provided at the bottom of the curb ramp and shall be permitted to overlap other turning spaces and clear spaces. If the turning space is constrained on 2 or more sides, the turning space shall be 1.2 m (4.0 ft) minimum by 1.5 m (5.0 ft). The 1.5 m (5.0 ft) dimension shall be provided in the direction of the pedestrian street crossing.

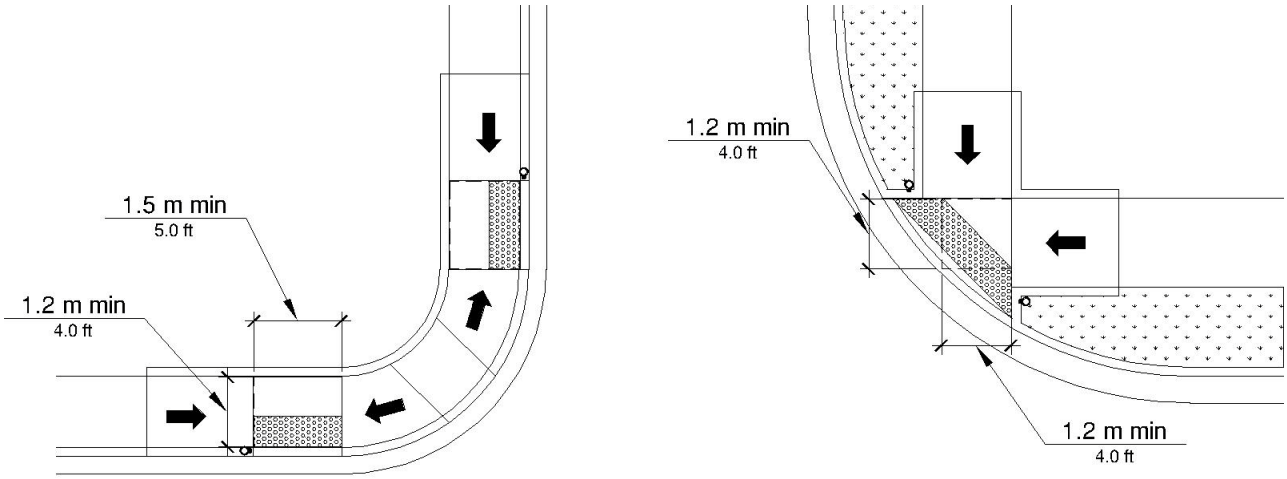

Figure R304.3.1
Turning Space

R304.3.2 Running Slope. The running slope of the curb ramp shall be in-line with the direction of sidewalk travel. The running slope of the curb ramp shall be 5 percent minimum and 8.3 percent maximum but shall not require the ramp length to exceed 4.5 m (15.0 ft) minimum. The running slope of the turning space shall be 2 percent maximum.

R304.4 Blended Transitions. Blended transitions shall comply with R304.4 and R304.5.

R304.4.1 Running Slope. The running slope of blended transitions shall be 5 percent maximum.

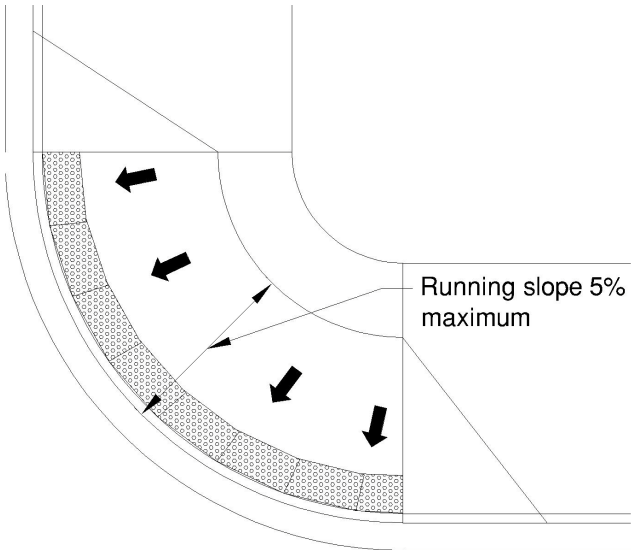

Figure R304.4.1
Running Slope

R304.5 Common Requirements. Curb ramps and blended transitions shall comply with R304.5.

R304.5.1 Width. The clear width of curb ramp runs (excluding any flared sides), blended transitions, and turning spaces shall be 1.2 m (4.0 ft) minimum.

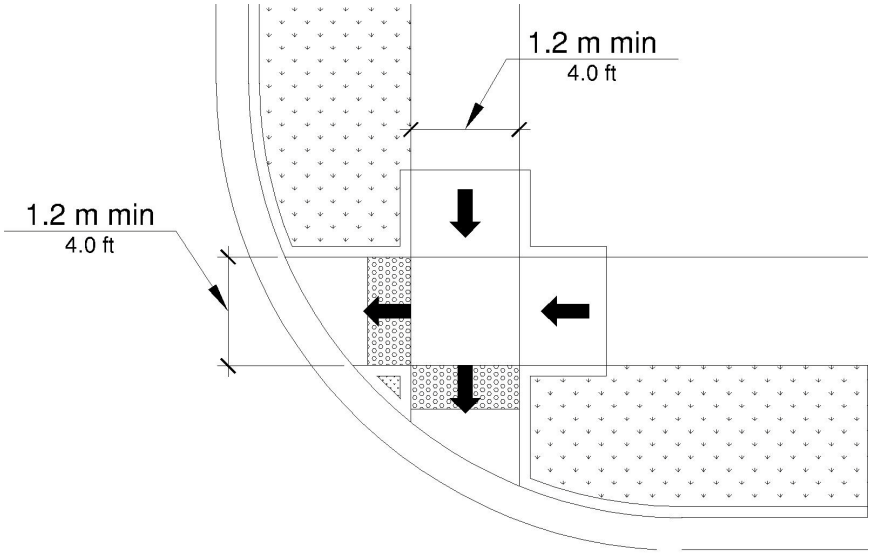

Figure R304.5.1
Width

R304.5.2 Grade Breaks. Grade breaks at the top and bottom of curb ramp runs shall be perpendicular to the direction of the ramp run. Grade breaks shall not be permitted on the surface of ramp runs and turning spaces. Surface slopes that meet at grade breaks shall be flush.

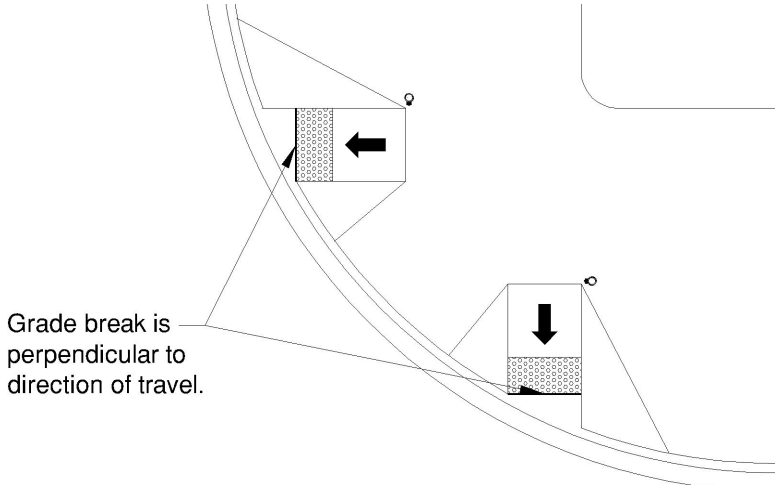

Figure R304.5.2
Grade Breaks

R304.5.3 Cross Slope. The cross slope of curb ramps, blended transitions, and turning spaces shall be 2 percent maximum. At pedestrian street crossings without yield or stop control and at midblock pedestrian street crossings, the cross slope shall be permitted to equal the street or highway grade.

> **Advisory R304.5.3 Cross Slope.** Pedestrian street crossings without yield or stop control are crossings where there is no yield or stop sign, or where there is a traffic signal that is designed for the green phase. At pedestrian street crossings without yield or stop control, vehicles can proceed through the intersection without slowing or stopping.

R304.5.4 Counter Slope. The counter slope of the gutter or street at the foot of curb ramp runs, blended transitions, and turning spaces shall be 5 percent maximum.

R304.5.5 Clear Space. Beyond the bottom grade break, a clear space 1.2 m (4.0 ft) minimum by 1.2 m (4.0 ft) minimum shall be provided within the width of the pedestrian street crossing and wholly outside the parallel vehicle travel lane.

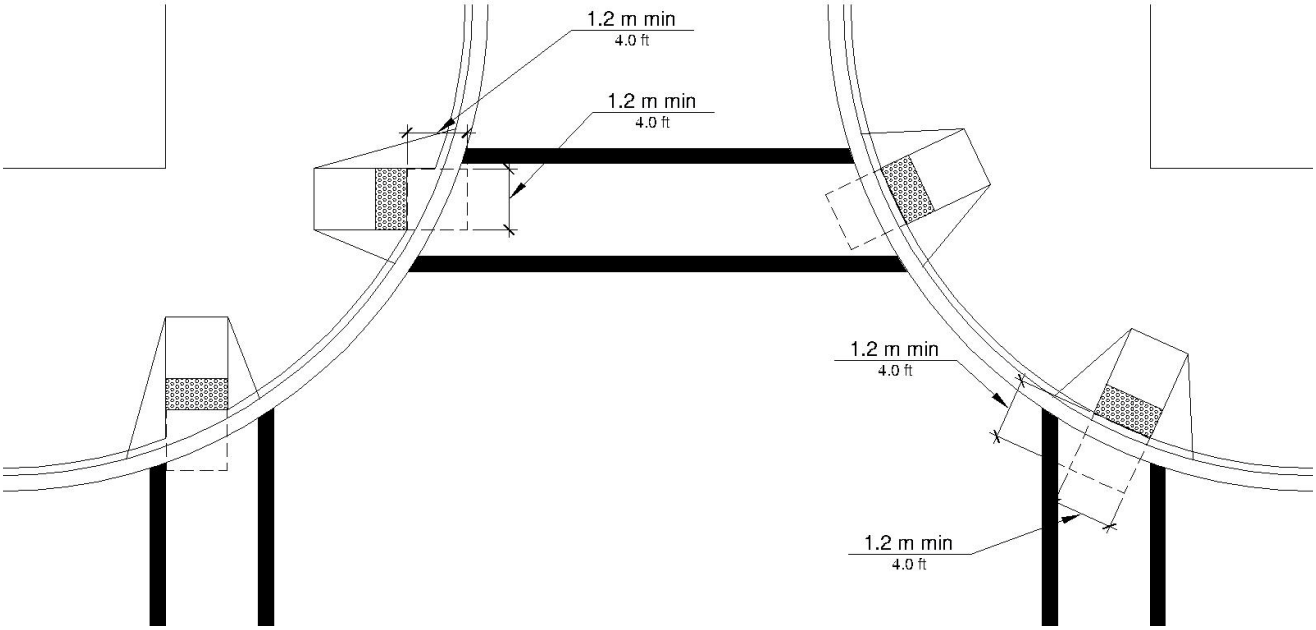

Figure R304.5.5
Clear Space

R305 Detectable Warning Surfaces

R305.1 General. Detectable warning surfaces shall consist of truncated domes aligned in a square or radial grid pattern and shall comply with R305.

R305.1.1 Dome Size. The truncated domes shall have a base diameter of 23 mm (0.9 in) minimum and 36 mm (1.4 in) maximum, a top diameter of 50 percent of the base diameter minimum and 65 percent of the base diameter maximum, and a height of 5 mm (0.2 in).

> **Advisory R305.1.1 Dome Size.** Where the truncated domes are arrayed radially, they may differ in diameter and center-to-center spacing within the ranges specified in R305.1.1 and R305.1.2.

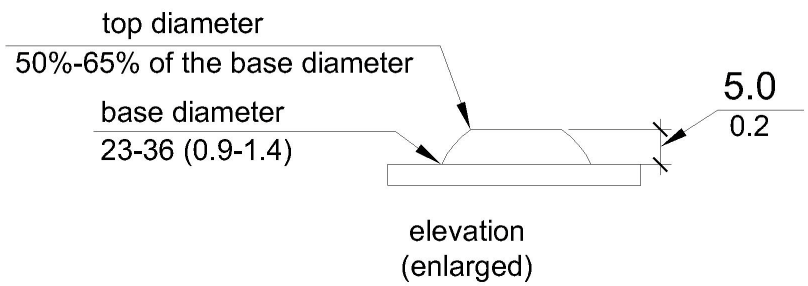

Figure R305.1.1
Dome Size

R305.1.2 Dome Spacing. The truncated domes shall have a center-to-center spacing of 41 mm (1.6 in) minimum and 61 mm (2.4 in) maximum, and a base-to-base spacing of 17 mm (0.65 in) minimum, measured between the most adjacent domes.

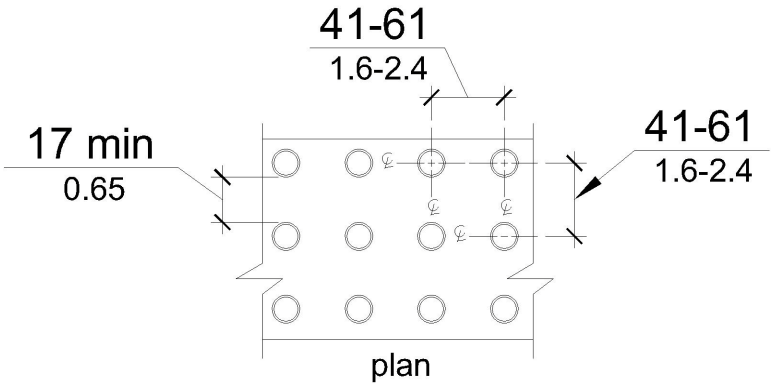

Figure R305.1.2
Dome Spacing

R305.1.3 Contrast. Detectable warning surfaces shall contrast visually with adjacent gutter, street or highway, or pedestrian access route surface, either light-on-dark or dark-on-light.

> **Advisory R305.1.3 Contrast.** Visual contrast may be provided on the full surface of the curb ramp but should not extend to flared sides. Visual contrast also helps pedestrians who use wheelchairs to locate the curb ramp from the other side of the street.

R305.1.4 Size. Detectable warning surfaces shall extend 610 mm (2.0 ft) minimum in the direction of pedestrian travel. At curb ramps and blended transitions, detectable warning surfaces shall extend the full width of the ramp run (excluding any flared sides), blended transition, or turning space. At pedestrian at-grade rail crossings not located within a street or highway, detectable warnings shall extend the full width of the crossing. At boarding platforms for buses and rail vehicles, detectable warning surfaces shall extend the full length of the public use areas of the platform. At boarding and alighting areas at sidewalk or street level transit stops for rail vehicles, detectable warning surfaces shall extend the full length of the transit stop.

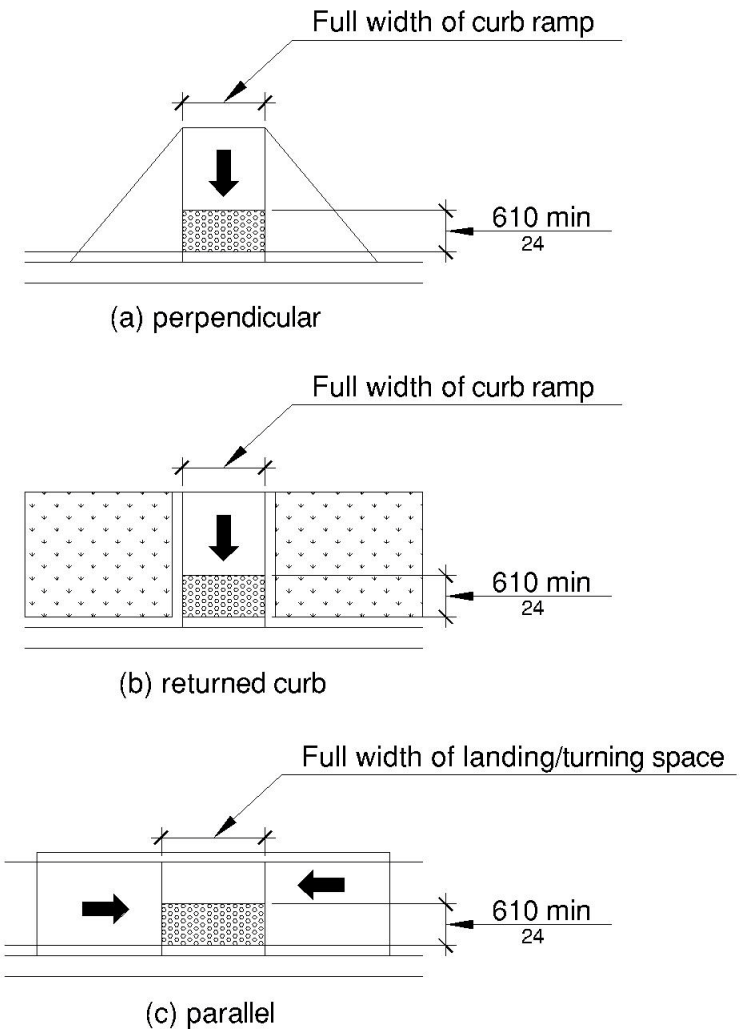

Figure R305.1.4
Size

R305.2 Placement. The placement of detectable warning surfaces shall comply with R305.2.

Advisory R305.2 Placement. Some detectable warning products require a concrete border for proper installation. The concrete border should not exceed 51 mm (2 in). Where the back of curb edge is tooled to provide a radius, the border dimension should be measured from the end of the radius.

R305.2.1 Perpendicular Curb Ramps. On perpendicular curb ramps, detectable warning surfaces shall be placed as follows:

1. Where the ends of the bottom grade break are in front of the back of curb, detectable warning surfaces shall be placed at the back of curb.

2. Where the ends of the bottom grade break are behind the back of curb and the distance from either end of the bottom grade brake to the back of curb is 1.5 m (5.0 ft) or less, detectable warning surfaces shall be placed on the ramp run within one dome spacing of the bottom grade break.

3. Where the ends of the bottom grade break are behind the back of curb and the distance from either end of the bottom grade brake to the back of curb is more than 1.5 m (5.0 ft), detectable warning surfaces shall be placed on the lower landing at the back of curb.

Advisory R305.2.1 Perpendicular Curb Ramps. Detectable warning surfaces are intended to provide a tactile equivalent underfoot of the visible curb line. If detectable warning surfaces are placed too far from the curb line because of a large curb radius, the location may compromise effective crossing. Detectable warning surfaces should not be placed on paving or expansion joints. The rows of truncated domes in detectable warning surfaces should be aligned perpendicular to the grade break between the ramp run and the street so pedestrians who use wheelchairs can ”track” between the domes. Where detectable warning surfaces are provided on a surface with a slope that is less than 5 percent, dome orientation is less critical.

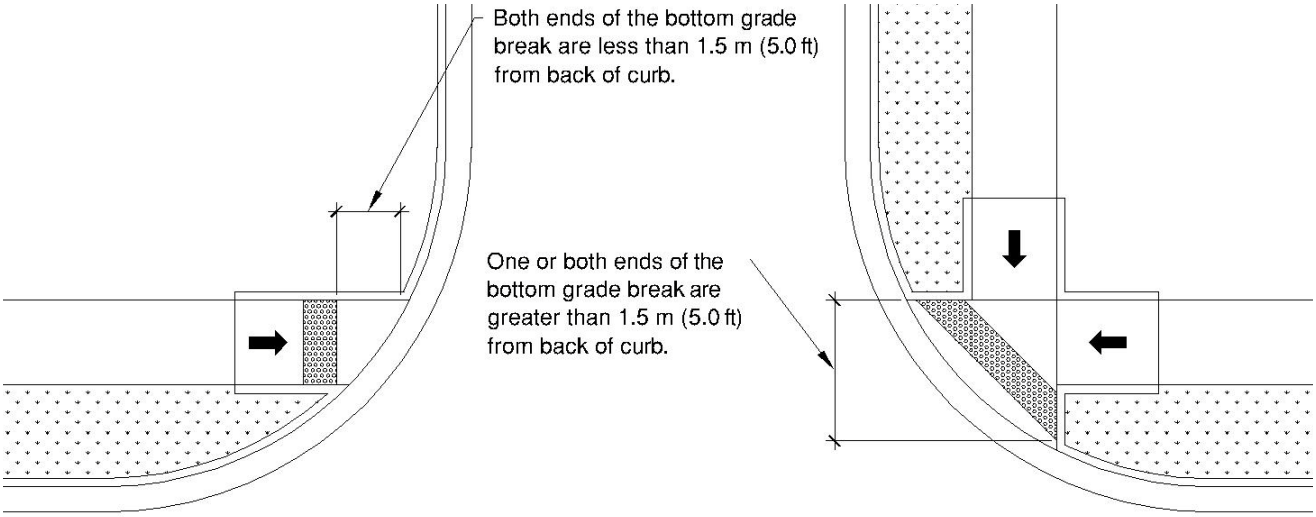

Figure R305.2.1
Perpendicular Curb Ramps

R305.2.2 Parallel Curb Ramps. On parallel curb ramps, detectable warning surfaces shall be placed on the turning space at the flush transition between the street and sidewalk.

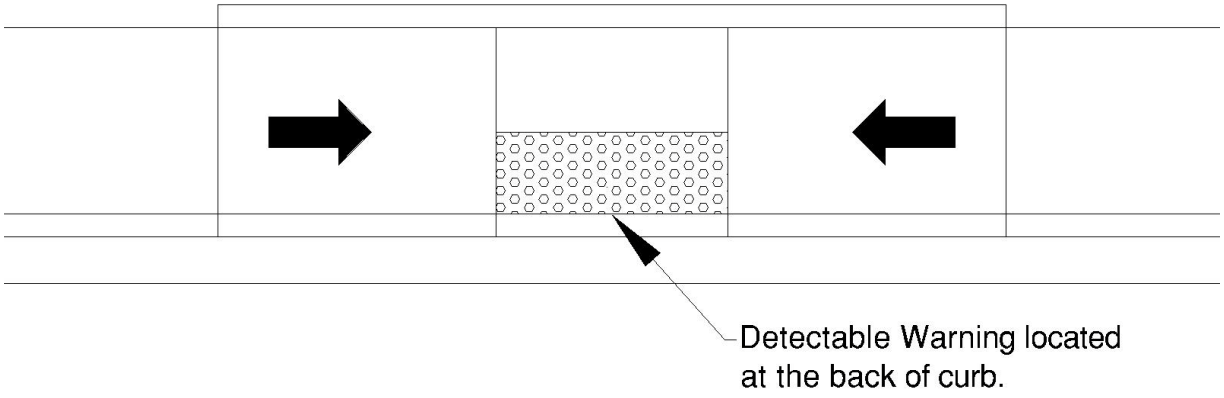

Figure R305.2.2
Parallel Curb Ramps

R305.2.3 Blended Transitions. On blended transitions, detectable warning surfaces shall be placed at the back of curb. Where raised pedestrian street crossings, depressed corners, or other level pedestrian street crossings are provided, detectable warning surfaces shall be placed at the flush transition between the street and the sidewalk.

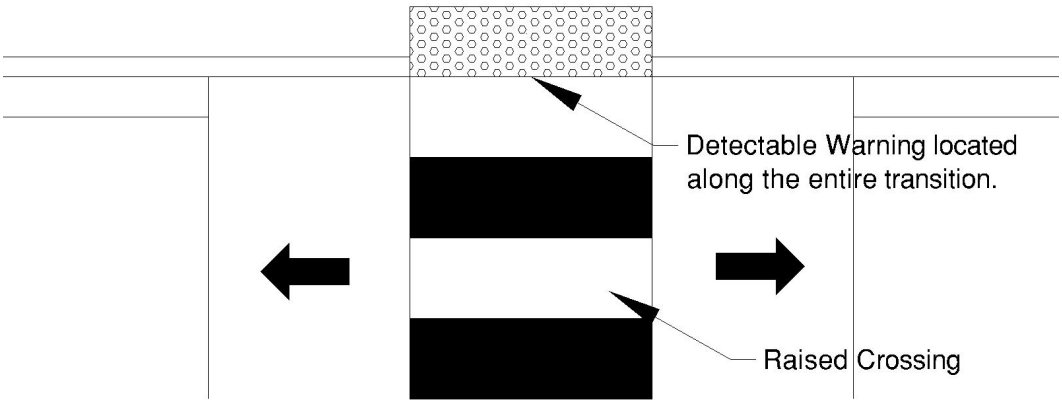

Figure R305.2.3
Blended Transitions

R305.2.4 Pedestrian Refuge Islands. At cut-through pedestrian refuge islands, detectable warning surfaces shall be placed at the edges of the pedestrian island and shall be separated by a 610 mm (2.0 ft) minimum length of surface without detectable warnings.

Advisory R305.2.4 Pedestrian Refuge Islands. The edges of cut-through pedestrian refuge islands can provide useful cues to the direction of the crossing.

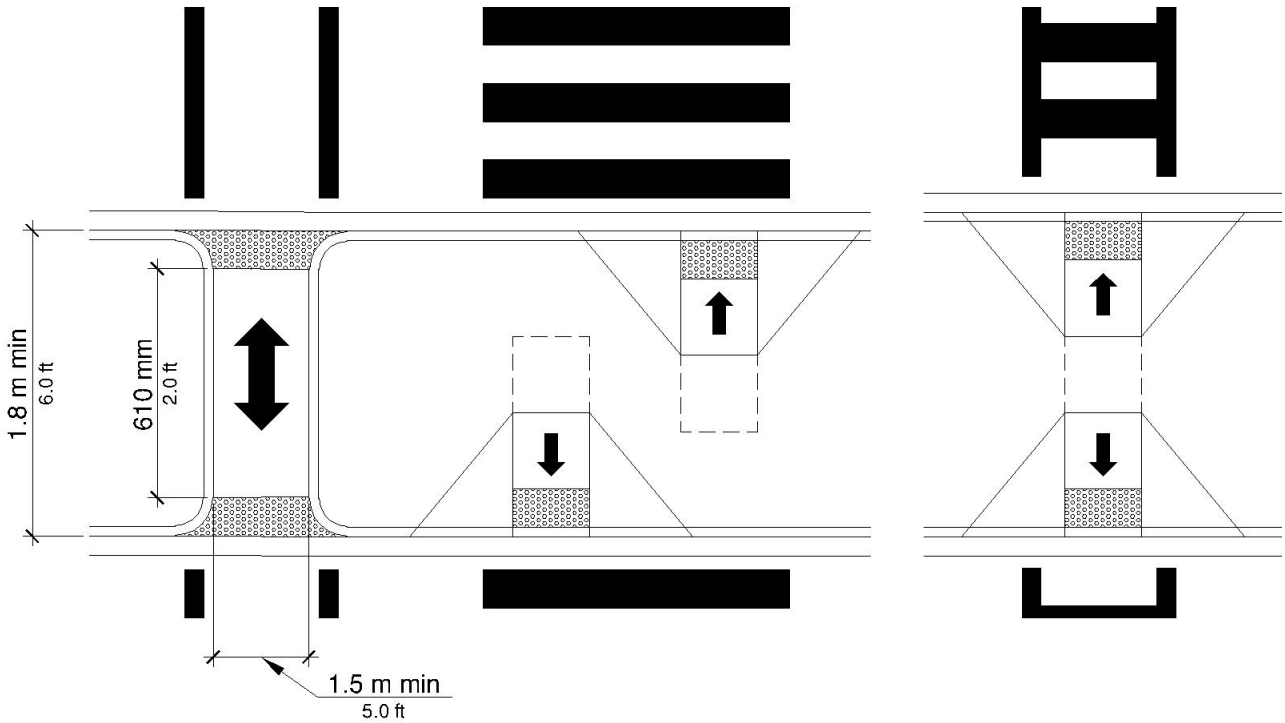

Figure R305.2.4
Pedestrian Refuge Islands

R305.2.5 Pedestrian At-Grade Rail Crossings. At pedestrian at-grade rail crossings not located within a street or highway, detectable warning surfaces shall be placed on each side of the rail crossing. The edge of the detectable warning surface nearest the rail crossing shall be 1.8 m (6.0 ft) minimum and 4.6 m (15.0 ft) maximum from the centerline of the nearest rail. Where pedestrian gates are provided, detectable warning surfaces shall be placed on the side of the gates opposite the rail.

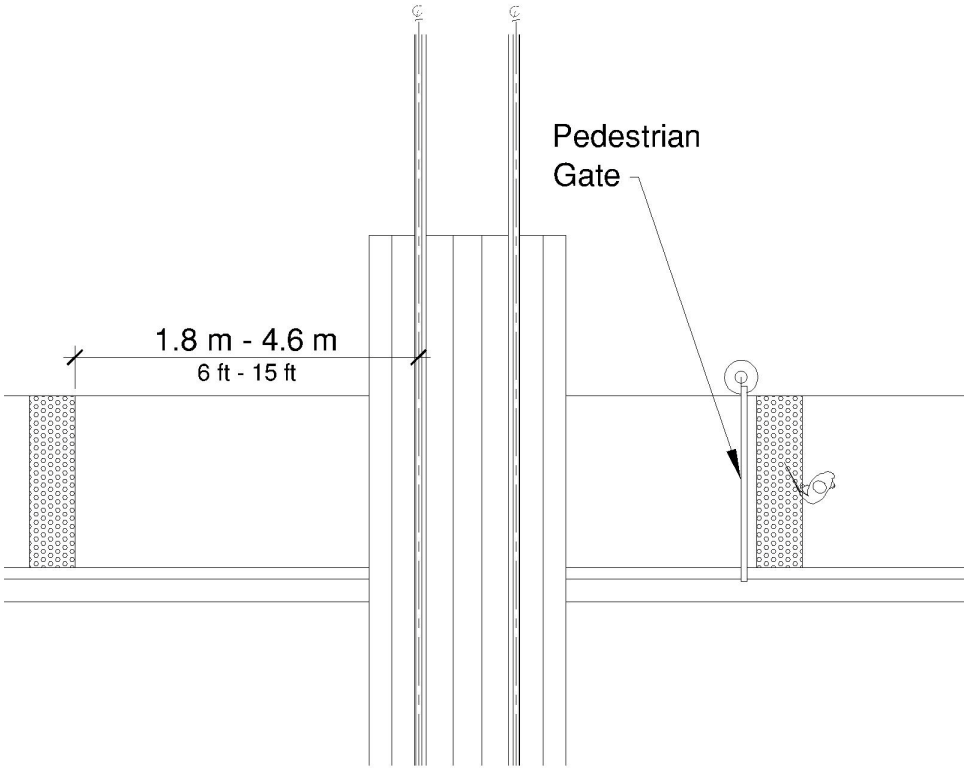

Figure R305.2.5
Pedestrian At-Grade Rail Crossings

R305.2.6 Boarding Platforms. At boarding platforms for buses and rail vehicles, detectable warning surfaces shall be placed at the boarding edge of the platform.

R305.2.7 Boarding and Alighting Areas. At boarding and alighting areas at sidewalk or street level transit stops for rail vehicles, detectable warning surfaces shall be placed at the side of the boarding and alighting area facing the rail vehicles.

R306 Pedestrian Street Crossings

R306.1 General. Pedestrian street crossings shall comply with R306.

R306.2 Pedestrian Signal Phase Timing. All pedestrian signal phase timing shall comply with section 4E.06 of the MUTCD (incorporated by reference, see R104.2) and shall be based on a pedestrian clearance time that is calculated using a pedestrian walking speed of 1.1 m/s (3.5 ft/s) or less.

R306.3 Roundabouts. Where pedestrian facilities are provided at roundabouts, they shall comply with R306.3.

> **Advisory R306.3 Roundabouts.** Pedestrian street crossings at roundabouts can be difficult for pedestrians who are blind or have low vision to identify because the crossings are located off to the side of the pedestrian circulation path around the street or highway. The continuous traffic flow at roundabouts removes many of the audible cues that pedestrians who are blind use to navigate pedestrian street crossings. Water fountains and other features that produce background noise should not be placed in the middle island of a roundabout because pedestrians who are blind use auditory cues to help detect gaps in traffic. Multi-lane pedestrian street crossings at roundabouts involve an increased risk of pedestrian exposure to accident.

R306.3.1 Separation. Where sidewalks are flush against the curb and pedestrian street crossing is not intended, a continuous and detectable edge treatment shall be provided along the street side of the sidewalk. Detectable warning surfaces shall not be used for edge treatment. Where chains, fencing, or railings are used for edge treatment, they shall have a bottom edge 380 mm (15 in) maximum above the sidewalk.

> **Advisory R306.3.1 Separation.** Carefully delineated pedestrian street crossing approaches with plantings or other defined edges provide effective non-visual cues for identifying pedestrian street crossings at roundabouts. European and Australian roundabouts provide a 610 mm (24 inch) width of tactile surface treatment from the centerline of the curb ramp or blended transition across the full width of the sidewalk to provide an underfoot cue for identifying pedestrian street crossings. Detectable warning surfaces should not be used to guide pedestrians who are blind or have low vision to pedestrian street crossings because detectable warning surfaces indicate the flush transition between the sidewalk and the street or highway. Schemes that remove cyclists from the street or highway by means of a ramp that angles from the curb lane to the sidewalk and then provide re-entry by means of a similar ramp beyond pedestrian street crossings can provide false cues to pedestrians who are using the edge of the sidewalk for wayfinding about the location of pedestrian street crossings.

R306.3.2 Pedestrian Activated Signals. At roundabouts with multi-lane pedestrian street crossings, a pedestrian activated signal complying with R209 shall be provided for each multi-lane segment of each pedestrian street crossing, including the splitter island. Signals shall clearly identify which pedestrian street crossing segment the signal serves.

Advisory R306.3.2 Pedestrian Activated Signals. Roundabouts with single-lane approach and exit legs are not required to provide pedestrian activated signals. Pedestrian activated signals must comply with the requirements for accessible pedestrian signals and pedestrian pushbuttons (see R209). Pedestrian activated signals installed at splitter islands should be carefully located and separated so that signal spillover does not give conflicting information about which pedestrian street crossing has the WALK indication displayed. Pedestrian Hybrid Beacons can be used at roundabouts (see MUTCD sections 4F.01 through 4F.03). Pedestrian Hybrid Beacons are traffic signals that consist of a yellow signal centered below two horizontally aligned red signals. The signals are normally not illuminated. The signals are initiated only upon pedestrian activation and can be timed to minimize the interruption of traffic. The signals cease operation after the pedestrian clears the crosswalk. When activated by a pedestrian, the following signals are displayed to drivers: a flashing yellow signal, then a steady yellow signal, then two steady red signals during the pedestrian walk interval, and then alternating flashing red signals during the pedestrian clearance interval. The following signals are displayed to pedestrians: a steady upraised hand (symbolizing DON'T WALK) when the flashing or steady yellow signal is operating, then a walking person (symbolizing WALK) when the steady red signals are operating, and then a flashing upraised hand (symbolizing DON'T WALK) when the alternating flashing red signals are operating.

R306.4 Channelized Turn Lanes at Roundabouts. At roundabouts with pedestrian street crossings, pedestrian activated signals complying with R209 shall be provided at pedestrian street crossings at multi-lane channelized turn lanes.

R306.5 Channelized Turn Lanes at Other Signalized Intersections. At signalized intersections other than roundabouts with pedestrian street crossings, pedestrian activated signals complying with R209 shall be provided at pedestrian street crossings at multi-lane channelized turn lanes.

R307 Accessible Pedestrian Signals and Pedestrian Pushbuttons (See R209)

R308 Transit Stops and Transit Shelters

R308.1 Transit Stops. Transit stops shall comply with R308.1.

Advisory R308.1 Transit Stops. Transit stops should be located so that there is a level and stable surface for boarding vehicles. Locating transit stops at signalized intersections increases the usability for pedestrian with disabilities. Where security bollards are installed at transit stops, they must not obstruct the clear space at boarding and alighting areas or reduce the required clear width at pedestrian access routes (see R210).

R308.1.1 Boarding and Alighting Areas. Boarding and alighting areas at sidewalk or street level transit stops shall comply with R308.1.1 and R308.1.3. Where transit stops serve vehicles with more than one car, boarding and alighting areas serving each car shall comply with R308.1.1 and R308.1.3.

Advisory R308.1.1 Boarding and Alighting Areas. Where a transit shelter is provided, the boarding and alighting area can be located either within or outside of the shelter.

R308.1.1.1 Dimensions. Boarding and alighting areas shall provide a clear length of 2.4 m (8.0 ft) minimum, measured perpendicular to the curb or street or highway edge, and a clear width of 1.5 m (5.0 ft) minimum, measured parallel to the street or highway.

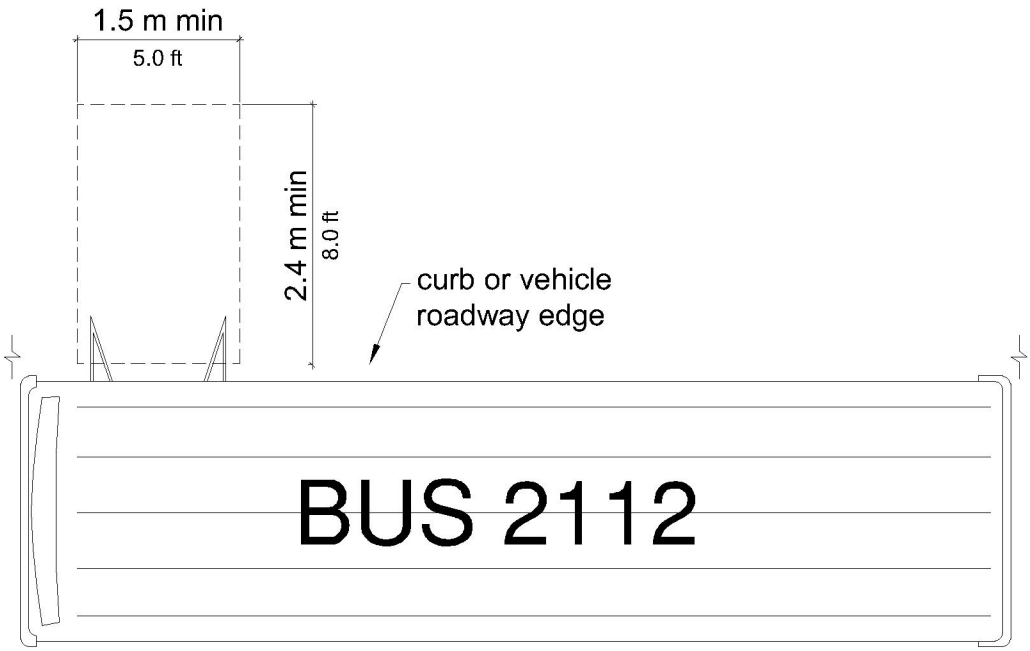

Figure R308.1.1.1
Dimensions

R308.1.1.2 Grade. Parallel to the street or highway, the grade of boarding and alighting areas shall be the same as the street or highway, to the extent practicable. Perpendicular to the street or highway, the grade of boarding and alighting areas shall not be steeper than 2 percent.

R308.1.2 Boarding Platforms. Boarding platforms at transit stops shall comply with R308.1.2 and R308.1.3.

R308.1.2.1 Platform and Vehicle Floor Coordination. Boarding platforms shall be positioned to coordinate with vehicles in accordance with the applicable requirements in 49 CFR parts 37 and 38.

Advisory R308.1.2.1 Platform and Vehicle Floor Coordination. The Department of Transportation regulations (49 CFR parts 37 and 38) require the height of the vehicle floor and the station platform to be coordinated so as to minimize the vertical and horizontal gaps.

R308.1.2.2 Slope. Boarding platforms shall not exceed a slope of 2 percent in any direction. Where boarding platforms serve vehicles operating on existing track or existing street or highway, the slope of the platform parallel to the track or the street or highway is permitted to be equal to the grade of the track or street or highway.

R308.1.3 Common Requirements. Boarding and alighting areas and boarding platforms shall comply with R308.1.3.

R308.1.3.1 Surfaces. The surfaces of boarding and alighting areas and boarding platforms shall comply with R302.7.

Advisory R308.1.3.1 Surfaces. Detectable warning surfaces are required at boarding and alighting areas for rail vehicles and at boarding platforms for buses and rail vehicles (see R208).

R308.1.3.2 Connection. Boarding and alighting areas and boarding platforms shall be connected to streets, sidewalks, or pedestrian circulation paths by pedestrian access routes complying with R302.

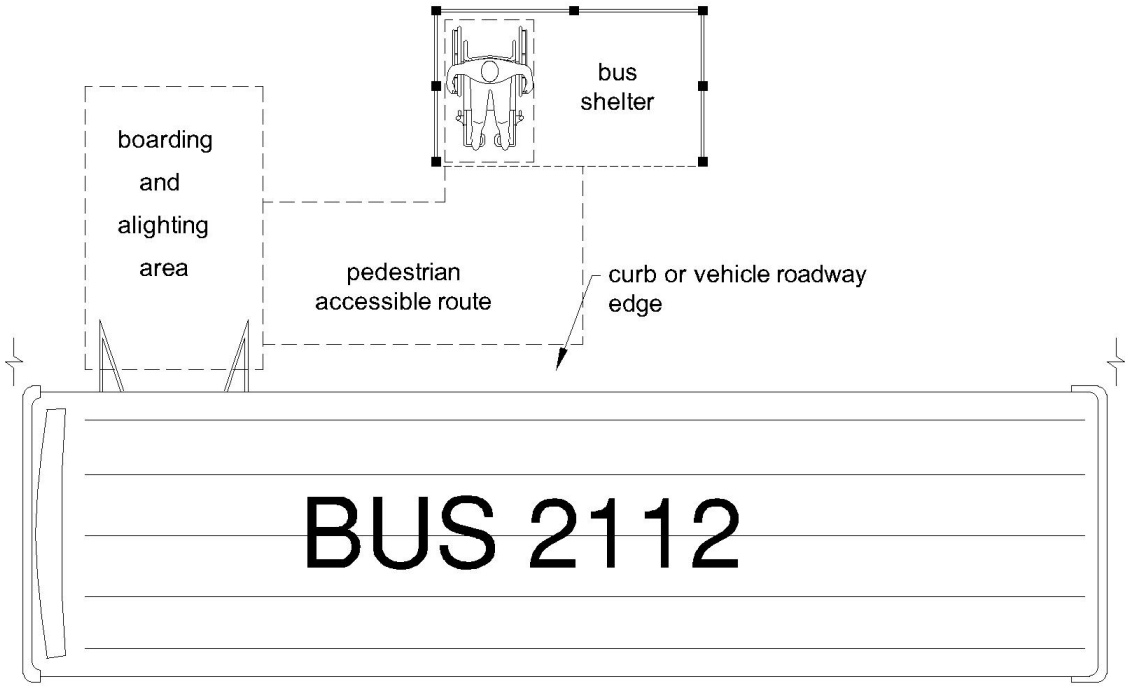

Figure R308.1.3.2
Connection

R308.2 Transit Shelters. Transit shelters shall be connected by pedestrian access routes complying with R302 to boarding and alighting areas or boarding platforms complying with R308.1. Transit shelters

shall provide a minimum clear space complying with R404 entirely within the shelter. Where seating is provided within transit shelters, the clear space shall be located either at one end of a seat or shall not overlap the area within 460 mm (1.5 ft) from the front edge of the seat. Environmental controls within transit shelters shall be proximity-actuated. Protruding objects within transit shelters shall comply with R402.

> **Advisory R308.2 Transit Shelters.** The clear space must be located entirely within the transit shelter and not interfere with other persons using the seating.

R309 On-Street Parking Spaces

R309.1 General. On-street parking spaces shall comply with R309.

> **Advisory R309.1 General.** R214 specifies how many accessible parking spaces must be provided on the block perimeter where on-street parking is marked or metered. Accessible parking spaces must be identified by signs displaying the International Symbol of Accessibility (see R211.3 and R411). Accessible parking spaces should be located where the street has the least crown and grade and close to key destinations.

R309.2 Parallel Parking Spaces. Parallel parking spaces shall comply with R309.2.

> **Advisory R309.2 Parallel Parking Spaces.** The sidewalk adjacent to accessible parallel parking spaces should be free of signs, street furniture, and other obstructions to permit deployment of a van side-lift or ramp or the vehicle occupant to transfer to a wheelchair or scooter. Accessible parallel parking spaces located at the end of the block face are usable by vans that have rear lifts and cars that have scooter platforms.

R309.2.1 Wide Sidewalks. Where the width of the adjacent sidewalk or available right-of-way exceeds 4.3 m (14.0 ft), an access aisle 1.5 m (5.0 ft) wide minimum shall be provided at street level the full length of the parking space and shall connect to a pedestrian access route. The access aisle shall comply with R302.7 and shall not encroach on the vehicular travel lane.

> **Advisory R309.2.1 Wide Sidewalks.** Vehicles may park at the curb or at the parking lane boundary and use the space required by R309.2.1 on either the driver or passenger side of the vehicle to serve as the access aisle.

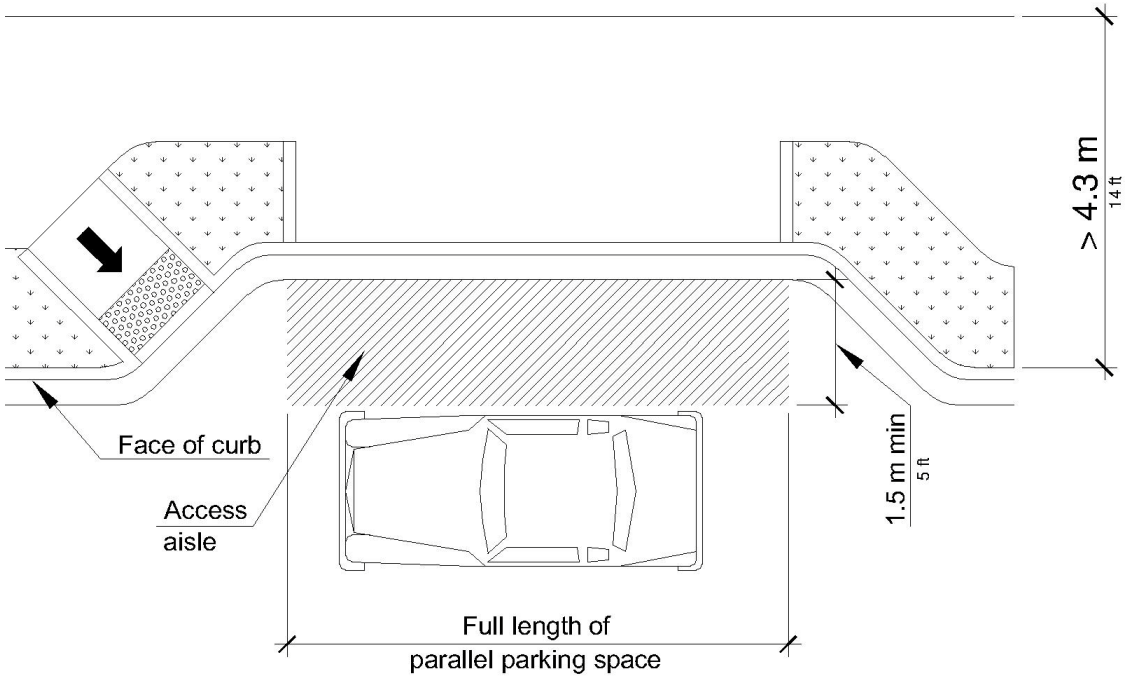

Figure R309.2.1
Wide Sidewalks

R309.2.1.1 Alterations. In alterations where the street or sidewalk adjacent to the parking spaces is not altered, an access aisle shall not be required provided the parking spaces are located at the end of the block face.

R309.2.2 Narrow Sidewalks. An access aisle is not required where the width of the adjacent sidewalk or the available right-of-way is less than or equal to 4.3 m (14.0 ft). When an access aisle is not provided, the parking spaces shall be located at the end of the block face.

Advisory R309.2.2 Narrow Sidewalks. Vehicle lifts or ramps can be deployed on a 2.4 m (8.0 ft) sidewalk if there are no obstructions.

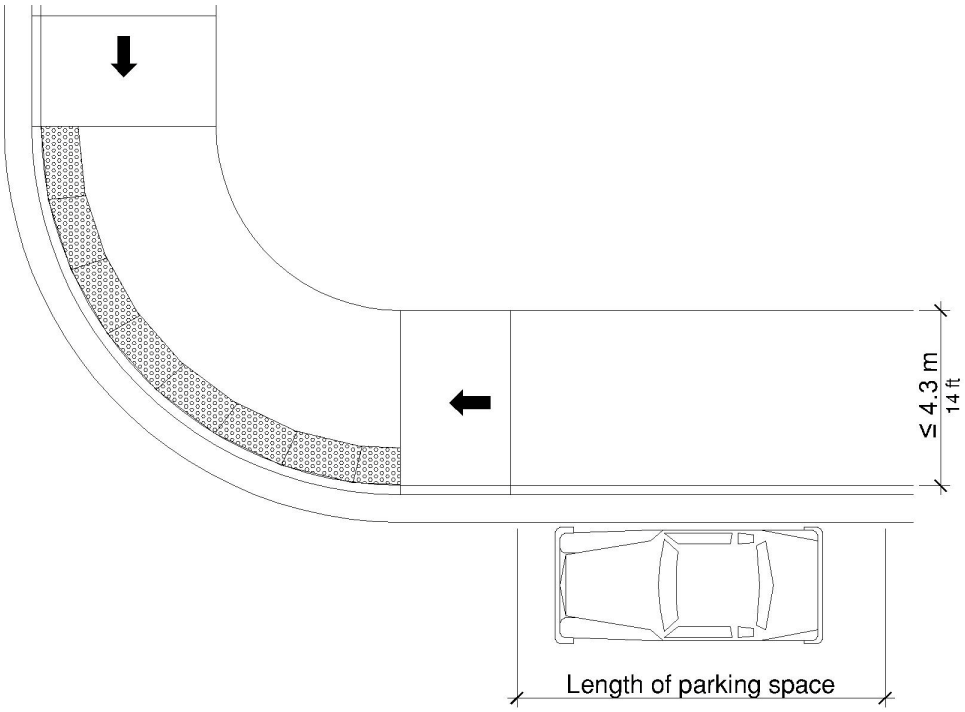

Figure R309.2.2
Narrow Sidewalks

R309.3 Perpendicular or Angled Parking Spaces. Where perpendicular or angled parking is provided, an access aisle 2.4 m (8.0 ft) wide minimum shall be provided at street level the full length of the parking space and shall connect to a pedestrian access route. The access aisle shall comply with R302.7 and shall be marked so as to discourage parking in the access aisle. Two parking spaces are permitted to share a common access aisle.

> **Advisory R309.3 Perpendicular or Angled Parking Spaces.** Perpendicular and angled parking spaces permit the deployment of a van side-lift or ramp.

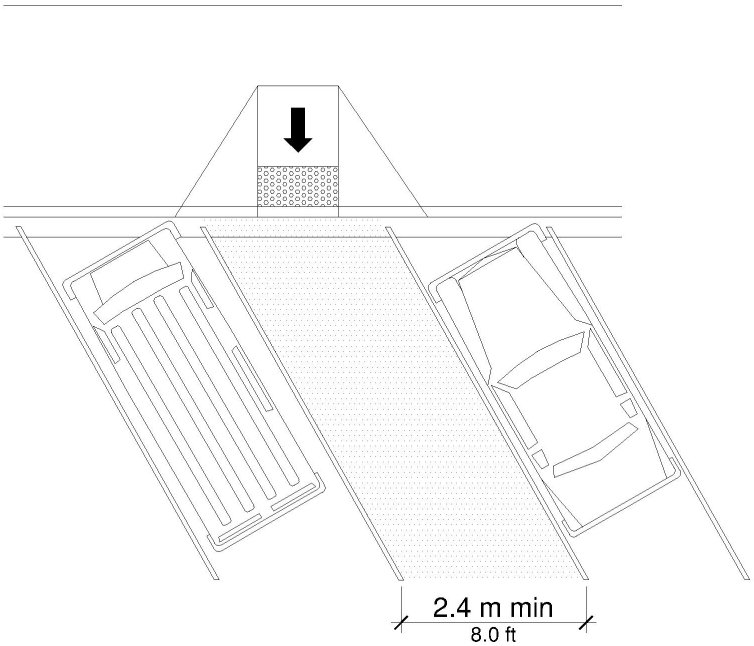

Figure R309.3
Perpendicular or Angled Parking Spaces

R309.4 Curb Ramps or Blended Transitions. Curb ramps or blended transitions complying with R304 shall connect the access aisle to the pedestrian access route. Curb ramps shall not be located within the access aisle.

> **Advisory R309.4 Curb Ramps or Blended Transitions.** At parallel parking spaces, curb ramps and blended transitions should be located so that a van side-lift or ramp can be deployed to the sidewalk and the vehicle occupant can transfer to a wheelchair or scooter. Parking spaces at the end of the block face can be served by curb ramps or blended transitions at the pedestrian street crossing. Detectable warning surfaces are not required on curb ramps and blended transitions that connect the access aisle to the sidewalk, including where the sidewalk is at the same level as the parking spaces, unless the curb ramps and blended transitions also serve pedestrian street crossings (see R208).

R309.5 Parking Meters and Parking Pay Stations. Parking meters and parking pay stations that serve accessible parking spaces shall comply with R309.5. Operable parts shall comply with R403.

R309.5.1 Location. At accessible parallel parking spaces, parking meters shall be located at the head or foot of the parking space.

> **Advisory R309.5.1 Location.** Locating parking meters at the head or foot of the parking space permits deployment of a van side-lift or ramp or the vehicle occupant to transfer to a wheelchair or scooter.

R309.5.2 Displays and Information. Displays and information shall be visible from a point located 1.0 m (3.3 ft) maximum above the center of the clear space in front of the parking meter or parking pay station.

R310 Passenger Loading Zones

R310.1 General. Passenger loading zones shall comply with R310.

> **Advisory R310.1 General.** Accessible passenger loading zones must be identified by signs displaying the International Symbol of Accessibility (see R211.3 and R411).

R310.2 Vehicle Pull-Up Space. Passenger loading zones shall provide a vehicular pull-up space 2.4 m (8.0 ft) wide minimum and 6.1 m (20.0 ft) long minimum.

R310.3 Access Aisle. Passenger loading zones shall provide access aisles complying with R310.3 adjacent to the vehicle pull-up space. Access aisles shall be at the same level as the vehicle pull-up space they serve and shall not overlap the vehicular travel lane. Curb ramps or blended transitions complying with R304 shall connect the access aisle to the pedestrian access route. Curb ramps are not permitted within the access aisle.

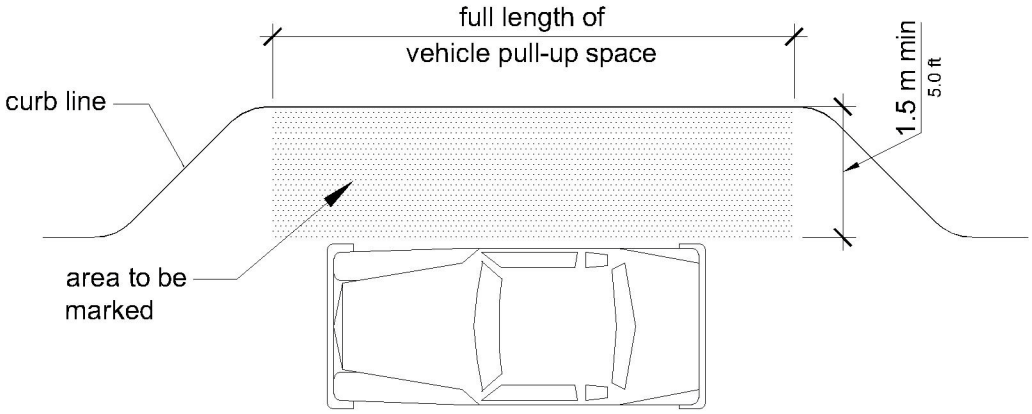

Figure R310.3
Access Aisle

R310.3.1 Width. Access aisles serving vehicle pull-up spaces shall be 1.5 m (5.0 ft) wide minimum.

R310.3.2 Length. Access aisles shall extend the full length of the vehicle pull-up spaces they serve.

R310.3.3 Marking. Access aisles shall be marked so as to discourage parking in them.

R310.3.4 Surfaces. Access aisle surfaces shall comply with R302.7.

CHAPTER R4: SUPPLEMENTARY TECHNICAL REQUIREMENTS

R401 General

R401.1 Scope. The supplemental technical requirements in Chapter 4 shall apply where required by Chapter 2 or where referenced by a requirement in this document.

R402 Protruding Objects

R402.1 General. Protruding objects shall comply with R402.

R402.2 Protrusion Limits. Objects with leading edges more than 685 mm (2.25 ft) and not more than 2 m (6.7 ft) above the finish surface shall protrude 100 mm (4 in) maximum horizontally into pedestrian circulation paths.

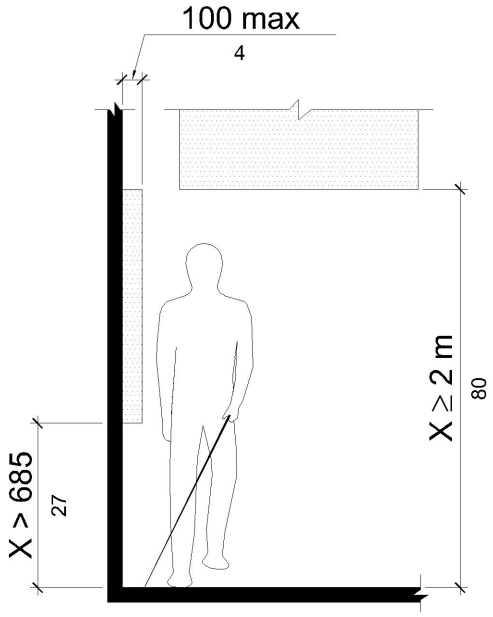

Figure R402.2
Protrusion Limits

R402.3 Post-Mounted Objects. Where objects are mounted on free-standing posts or pylons and the objects are 685 mm (2.25 ft) minimum and 2030 mm (6.7 ft) maximum above the finish surface, the objects shall overhang pedestrian circulation paths 100 mm (4 in) maximum measured horizontally from the post or pylon base. The base dimension shall be 64 mm (2.5 in) thick minimum. Where objects are mounted between posts or pylons and the clear distance between the posts or pylons is greater than 305 mm (1.0 ft), the lowest edge of the object shall be 685 mm (2.25 ft) maximum or 2 m (6.7 ft) minimum above the finish surface.

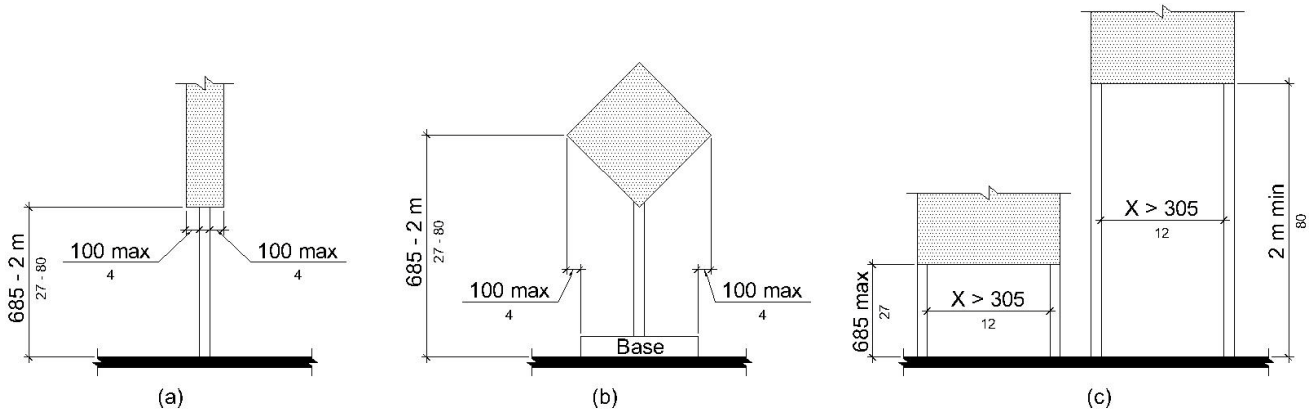

Figure R402.3
Post-Mounted Objects

R402.4 Reduced Vertical Clearance. Guardrails or other barriers to pedestrian travel shall be provided where the vertical clearance is less than 2 m (6.7 ft) high. The leading edge of the guardrail or barrier shall be located 685 mm (2.25 ft) maximum above the finish surface.

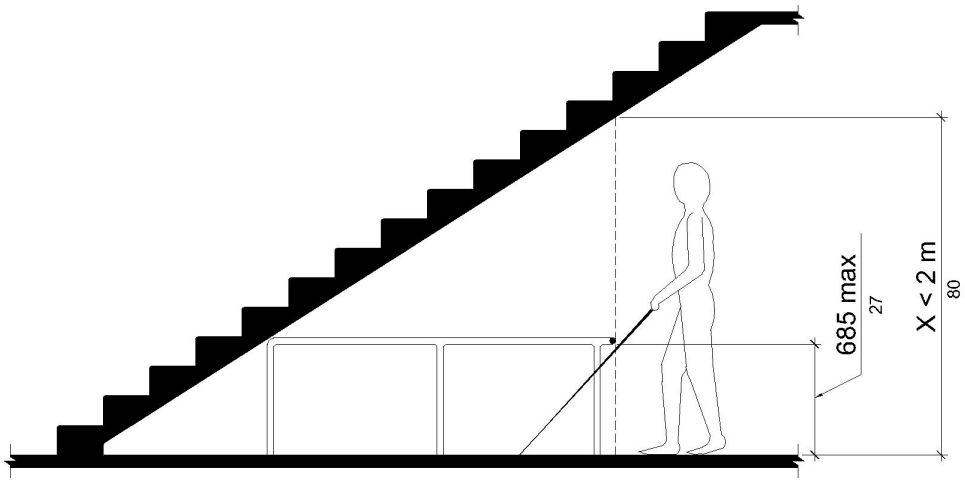

Figure R402.4
Reduced Vertical Clearance

R403 Operable Parts

R403.1 General. Operable parts shall comply with R403.

> **Advisory R403.1 General.** Operable parts on accessible pedestrian signals and pedestrian pushbuttons (see R209) and parking meters and parking pay stations that serve accessible parking spaces (see R309.5) must comply with R403.

R403.2 Clear Space. A clear space complying with R404 shall be provided at operable parts.

R403.3 Height. Operable parts shall be placed within one or more of the reach ranges specified in R406.

R403.4 Operation. Operable parts shall be operable with one hand and shall not require tight grasping, pinching, or twisting of the wrist. The force required to activate operable parts shall be 22 N (5 lbs) maximum.

R404 Clear Spaces

R404.1 General. Clear spaces shall comply with R404.

> **Advisory R404.1 General.** Clear spaces are required at operable parts (see R403.2), including accessible pedestrian signals and pedestrian pushbuttons (see R209) and parking meters and parking pay stations that serve accessible parking spaces (see R309.5). Clear spaces are also required at benches (see R212.6) and within transit shelters (see R308.2).

R404.2 Surfaces. Surfaces of clear spaces shall comply with R302.7 and shall have a running slope consistent with the grade of the adjacent pedestrian access route and cross slope of 2 percent maximum.

R404.3 Size. Clear spaces shall be 760 mm (2.5 ft) minimum by 1220 mm (4.0 ft) minimum.

R404.4 Knee and Toe Clearance. Unless otherwise specified, clear spaces shall be permitted to include knee and toe clearance complying with R405.

R404.5.Position. Unless otherwise specified, clear spaces shall be positioned for either forward or parallel approach to an element.

R404.6 Approach. One full unobstructed side of a clear space shall adjoin a pedestrian access route or adjoin another clear space.

R404.7 Maneuvering Space. Where a clear space is confined on all or part of three sides, additional maneuvering space shall be provided in accordance with R404.7.1 and R404.7.2.

R404.7.1 Forward Approach. The clear space and additional maneuvering space shall be 915 mm (3.0 ft) wide minimum where the depth exceeds 610 mm (2.0 ft).

R404.7.2 Parallel Approach. The clear space and additional maneuvering space shall be 1525 mm (5.0 ft) wide minimum where the depth exceeds 380 mm (1.25 ft).

R405 Knee and Toe Clearance

R405.1 General. Where space beneath an element is included as part of a clear space, the space shall comply with R405. Additional space shall not be prohibited beneath an element but shall not be considered as part of the clear space.

Advisory R405.1 General. Clearances are measured in relation to the usable clear space, not necessarily to the vertical support for an element. When determining clearance under an object, care should be taken to ensure that the space is clear of any obstructions.

R405.2 Toe Clearance

R405.2.1 General. Space under an element between the finish surface and 230 mm (9 in) above the finish surface shall be considered toe clearance and shall comply with R405.2.

R405.2.2 Maximum Depth. Toe clearance shall extend 635 mm (2.1 ft) maximum under an element.

R405.2.3 Minimum Required Depth. Where toe clearance is required at an element as part of a clear space, the toe clearance shall extend 430 mm (1.4 ft) minimum under the element.

R405.2.4 Width. Toe clearance shall be 760 mm (2.5 ft) wide minimum.

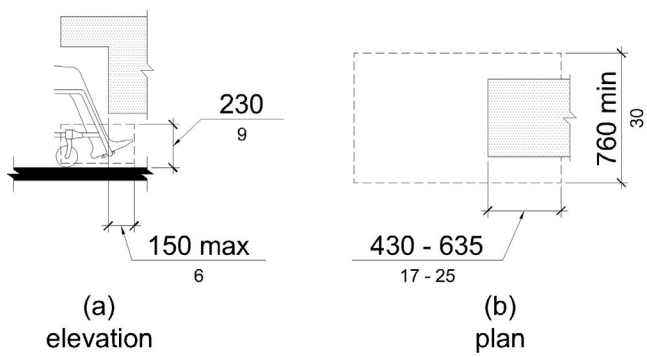

Figure R405.2
Toe Clearance

R405.3 Knee Clearance

R405.3.1 General. Space under an element between 230 mm (9 in) and 685 mm (2.25 ft) above the finish surface shall be considered knee clearance and shall comply with R405.3.

R405.3.2 Maximum Depth. Knee clearance shall extend 635 mm (2.1 ft) maximum under an element at 230 mm (9 in) above the finish surface.

R405.3.3 Minimum Required Depth. Where knee clearance is required under an element as part of a clear space, the knee clearance shall be 280 mm (11 in) deep minimum at 230 mm (9 in) above the finish surface, and 205 mm (8 in) deep minimum at 685 mm (2.25 ft) above the finish surface.

R405.3.4 Clearance Reduction. Between 230 mm (9 in) and 685 mm (2.25 ft) above the finish surface, the knee clearance shall be permitted to reduce at a rate of 25 mm (1 in) in depth for each 150 mm (6 in) in height.

R405.3.5 Width. Knee clearance shall be 760 mm (2.5 ft) wide minimum.

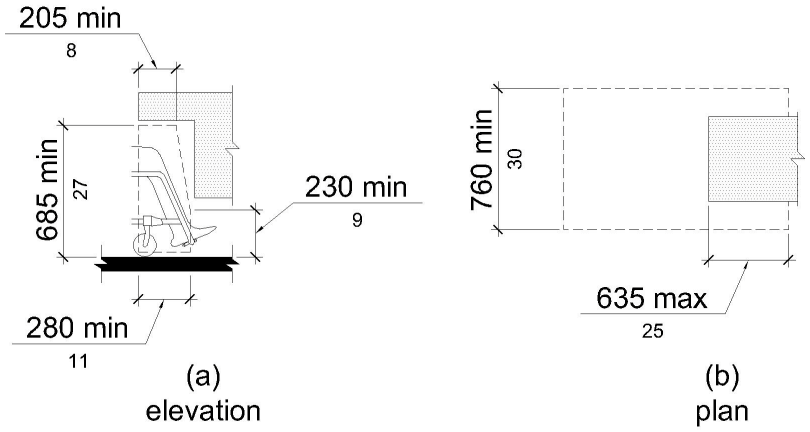

Figure R405.3
Knee Clearance

R406 Reach Ranges

R406.1 General. Reach ranges shall comply with R406.

R406.2 Unobstructed Forward Reach. Where a forward reach is unobstructed, the high forward reach shall be 1220 mm (4.0 ft) maximum and the low forward reach shall be 380 mm (1.25 ft) minimum above the finish surface. Forward reach over an obstruction is not permitted.

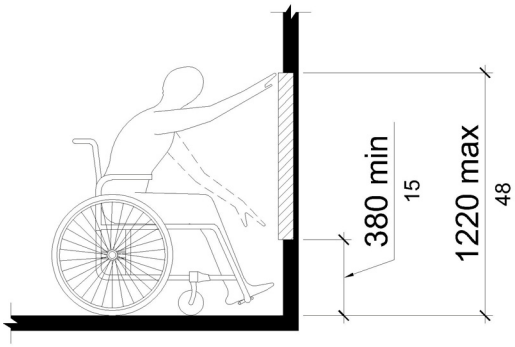

Figure R406.2
Unobstructed Forward Reach

R406.3 Unobstructed Side Reach. Where a clear space allows a parallel approach to an element and the side reach is unobstructed, the high side reach shall be 1220 mm (4.0 ft) maximum and the low side reach shall be 380 mm (1.25 ft) minimum above the finish surface. An obstruction shall be permitted between the clear space and the element where the depth of the obstruction is 255 mm (10 in) maximum.

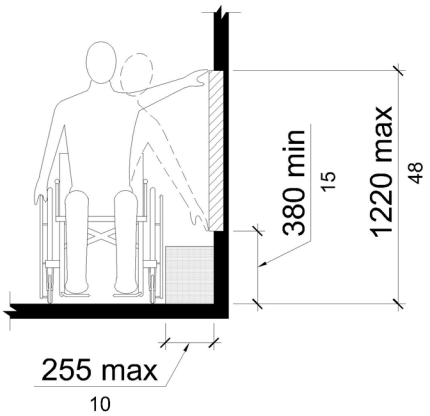

Figure R406.3
Unobstructed Side Reach

R407 Ramps

R407.1 General. Ramps shall comply with R407.

R407.2 Running Slope. Ramp runs shall have a running slope between 5 percent minimum and 8.3 percent maximum.

> **Advisory R407.2 Running Slope.** Ramps with the least possible running slope accommodate the widest range of users. Providing stairways along with ramps, where possible, benefits pedestrians with heart disease, limited stamina, and others for whom distance presents a greater barrier than steps.

R407.3 Cross Slope. The cross slope of ramp runs shall be 2 percent maximum.

R407.4 Width. The clear width of a ramp run and, where handrails are provided, the clear width between handrails shall be 915 mm (3.0 ft) minimum.

R407.5 Rise. The rise for any ramp run shall be 760 mm (2.5 ft) maximum.

R407.6 Landings. Ramps shall have landings at the top and the bottom of each ramp run. Landings shall comply with R407.6.

R407.6.1 Slope. Landing slopes shall be 2 percent maximum in any direction.

R407.6.2 Width. The landing clear width shall be at least as wide as the widest ramp run leading to the landing.

R407.6.3 Length. The landing clear length shall be 1.5 m (5.0 ft) long minimum.

R407.6.4 Change in Direction. Ramps that change direction between runs at landings shall have a clear landing 1.5 m (5.0 ft) minimum by 1.5 m (5.0 ft) minimum.

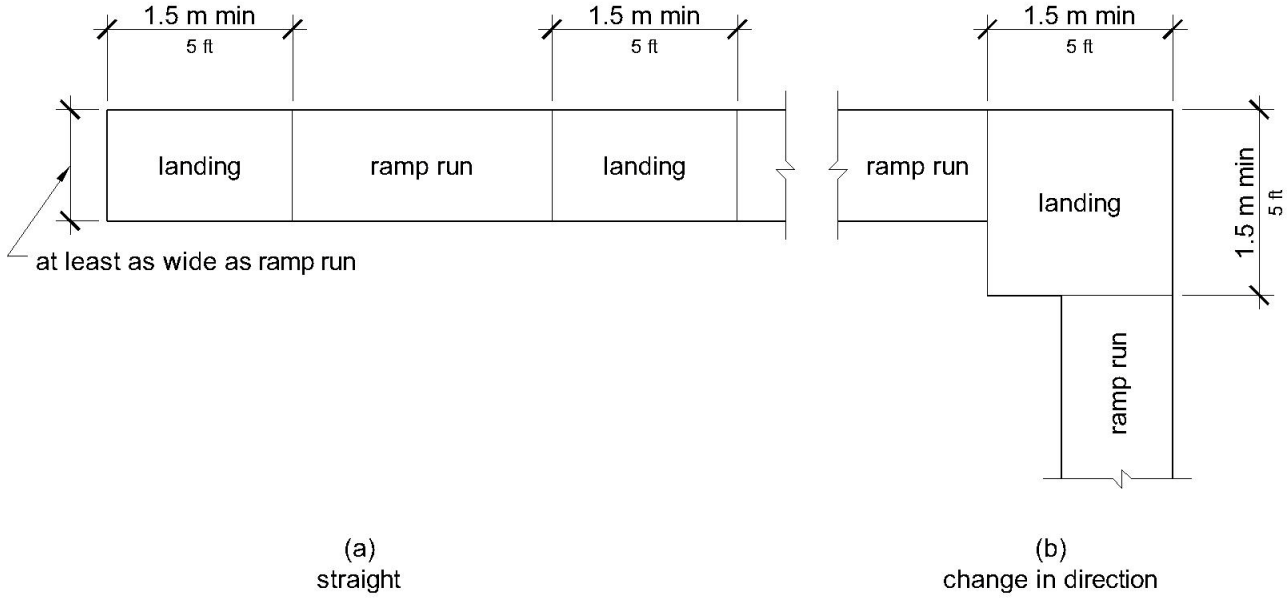

Figure R407.6
Landings

R407.7 Surfaces. Surfaces of ramp runs and landings shall comply with R302.7.

R407.8 Handrails. Ramp runs with a rise greater than 150 mm (6 in) shall have handrails complying with R409.

R407.9 Edge Protection. Edge protection complying with R407.9.1 or R407.9.2 shall be provided on each side of ramp runs and ramp landings.

R407.9.1 Extended Ramp Surface. The surface of the ramp run or landing shall extend 305 mm (1.0 ft) minimum beyond the inside face of a handrail complying with R409.

Advisory R407.9.1 Extended Ramp Surface. The extended surface prevents wheelchair casters and crutch tips from slipping off the ramp surface.

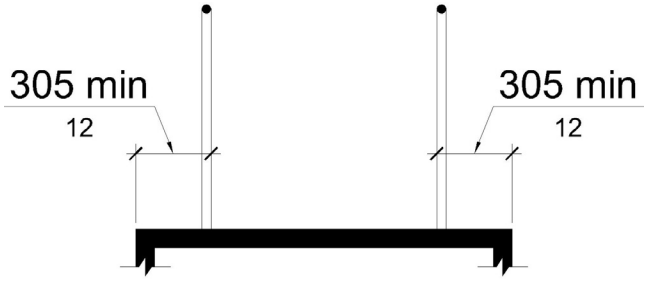

Figure R407.9.1
Extended Ramp Surface

R407.9.2 Curb or Barrier. A curb or barrier shall be provided that prevents the passage of a 100 mm (4 in) diameter sphere, where any portion of the sphere is within 100 mm (4 in) of the finish surface.

R408 Stairways

R408.1 General. Stairways shall comply with R408.

R408.2 Treads and Risers. All steps on a flight of stairs shall have uniform riser heights and uniform tread depths. Risers shall be 100 mm (4 in) high minimum and 180 mm (7 in) high maximum. Treads shall be 280 mm (11 in) deep minimum.

R408.3 Open Risers. Open risers are not permitted.

R408.4 Tread Surface. Stairway treads shall comply with R302.7. Changes in level are not permitted.

R408.5 Nosings. The radius of curvature at the leading edge of the tread shall be 13 mm (0.5 inch) maximum. Nosings that project beyond risers shall have the underside of the leading edge curved or beveled. Risers shall be permitted to slope under the tread at an angle of 30 degrees maximum from vertical. The permitted projection of the nosing shall extend 38 mm (1.5 in) maximum over the tread below.

R408.6 Handrails. Stairways shall have handrails complying with R409.

R409 Handrails

R409.1 General. Handrails required at ramps and stairways, and handrails provided on pedestrian circulation paths shall comply with R409.

Advisory R409.1 General. Handrails are required on ramp runs with a rise greater than 150 mm (6 in) (see R407.8) and stairways (see R408.6). Handrails are not required on pedestrian circulation paths. However, if handrails are provided on pedestrian circulation paths, the handrails must comply with R409 (see R217). The requirements in R409.2, R409.3, and R409.10 apply only to handrails at ramps and stairways, and do not apply to handrails provided on pedestrian circulation paths.

R409.2 Where Required. Handrails shall be provided on both sides of ramps and stairways.

R409.3 Continuity. Handrails shall be continuous within the full length of each ramp run or stair flight. Inside handrails on switchback or dogleg ramps and stairways shall be continuous between ramp runs or stair flights.

R409.4 Height. Top of gripping surfaces of handrails shall be 865 mm (2.8 ft) minimum and 965 mm (3.2 ft) maximum vertically above walking surfaces, ramp surfaces, and stair nosings. Handrails shall be at a consistent height above walking surfaces, ramp surfaces, and stair nosings.

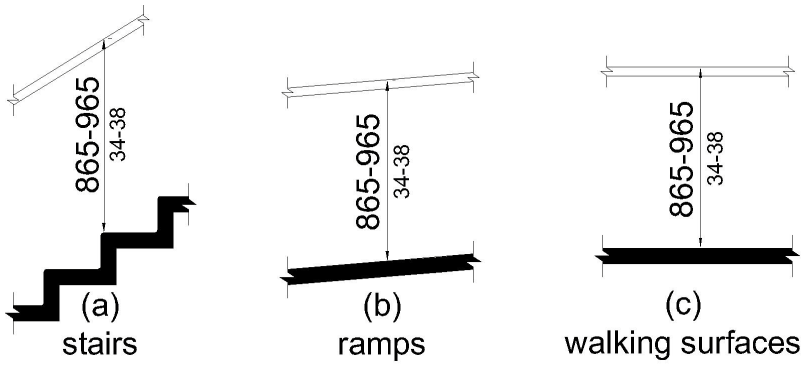

Figure R409.4
Height

R409.5 Clearance. Clearance between handrail gripping surfaces and adjacent surfaces shall be 38 mm (1.5 in) minimum.

R409.6 Gripping Surface. Handrail gripping surfaces shall be continuous along their length and shall not be obstructed along their tops or sides. The bottoms of handrail gripping surfaces shall not be obstructed for more than 20 percent of their length. Where provided, horizontal projections shall occur 38 mm (1.5 in) minimum below the bottom of the handrail gripping surface.

Advisory R409.6 Gripping Surface. Pedestrians with disabilities and others benefit from continuous gripping surfaces that permit users to reach the fingers outward or downward to grasp the handrail.

R409.7 Cross Section. Handrail gripping surfaces shall have a cross section complying with R409.7.1 or R409.7.2. Where expansion joints are necessary for large spans of handrails, the expansion joint is permitted to be smaller than the specified cross section diameters for a 25mm (1 in) length.

R409.7.1 Circular Cross Section. Handrail gripping surfaces with a circular cross section shall have an outside diameter of 32 mm (1.25 in) minimum and 51 mm (2 in) maximum.

R409.7.2 Non-Circular Cross Sections. Handrail gripping surfaces with a non-circular cross section shall have a perimeter dimension of 100 mm (4 in) minimum and 160 mm (6.25 in) maximum, and a cross-section dimension of 57 mm (2.25 in) maximum.

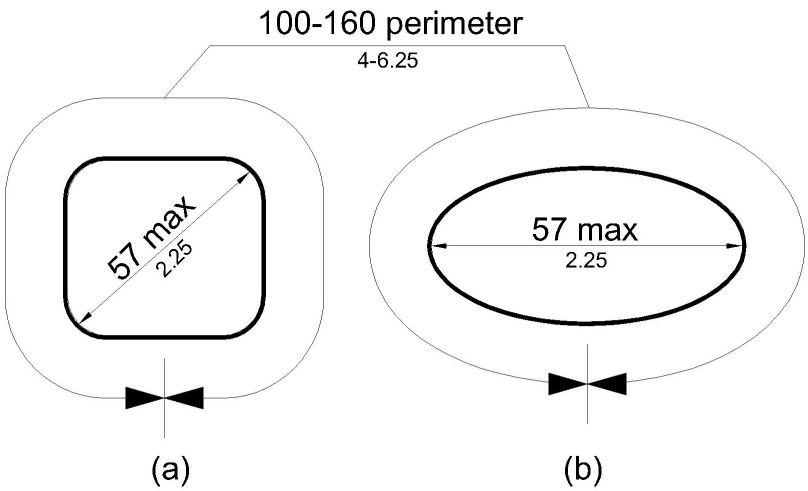

Figure R409.7.2
Non-Circular Cross Sections

R409.8 Surfaces. Handrail gripping surfaces and any surfaces adjacent to them shall be free of sharp or abrasive elements and shall have rounded edges.

R409.9 Fittings. Handrails shall not rotate within their fittings. Where expansion joints are necessary for large spans of handrails, the expansion joint is permitted to rotate in its fitting.

R409.10 Handrail Extensions. Handrail gripping surfaces shall extend beyond and in the same direction of ramp runs and stair flights in accordance with R409.10. Extensions shall not be required for continuous handrails at the inside turn of switchback or dogleg ramps and stairways. In alterations where handrail extensions would reduce the clear width required for pedestrian access routes, handrail extensions shall not be required.

R409.10.1 Top and Bottom Extension at Ramps. Ramp handrails shall extend horizontally above the landing for 305 mm (1.0 ft) minimum beyond the top and bottom of ramp runs. Extensions shall return to a wall, guard, or the landing surface, or shall be continuous to the handrail of an adjacent ramp run.

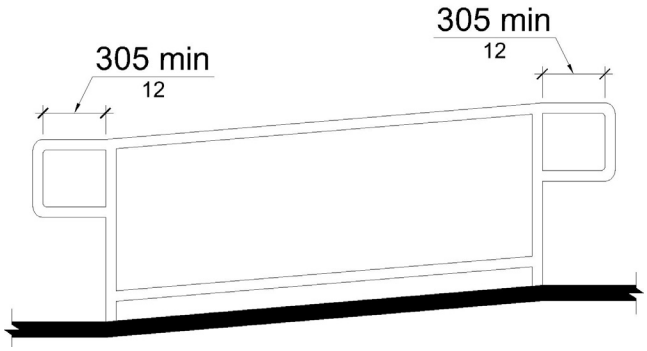

Figure R409.10.1
Top and Bottom Extension at Ramps

R409.10.2 Top Extension at Stairways. At the top of a stair flight, handrails shall extend horizontally above the landing for 305 mm (1.0 ft) minimum beginning directly above the first riser nosing. Extensions shall return to a wall, guard, or the landing surface, or shall be continuous to the handrail of an adjacent stair flight.

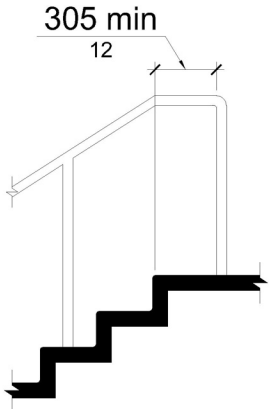

Figure R409.10.2
Top Extension at Stairways

R409.10.3 Bottom Extension at Stairways. At the bottom of a stair flight, handrails shall extend at the slope of the stair flight for a horizontal distance at least equal to one tread depth beyond the last riser nosing. Extensions shall return to a wall, guard, or the landing surface, or shall be continuous to the handrail of an adjacent stair flight.

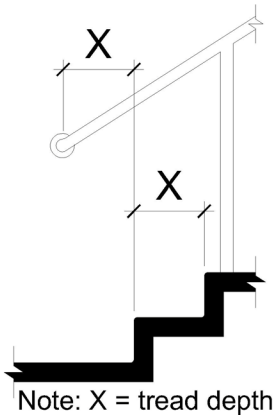

Figure R409.10.3
Bottom Extension at Stairways

R410 Visual Characters on Signs

R410.1 General. Visual characters on signs shall comply with R410.

R410.2 Finish and Contrast. Characters and their background shall have a non-glare finish. Characters shall contrast with their background with either light characters on a dark background or dark characters on a light background.

> **Advisory R410.2 Finish and Contrast.** Signs are more legible for pedestrians with low vision when characters contrast as much as possible with their background. Additional factors affecting the ease with which the text can be distinguished from its background include shadows cast by lighting sources, surface glare, and the uniformity of the text and its background colors and textures.

R410.3 Case. Characters shall be uppercase or lowercase or a combination of both.

R410.4 Style. Characters shall be conventional in form. Characters shall not be italic, oblique, script, highly decorative, or of other unusual forms.

R410.5 Character Proportions. Characters shall be selected from fonts where the width of the uppercase letter "O" is 55 percent minimum and 110 percent maximum of the height of the uppercase letter "I".

R410.6 Character Height. Minimum character height shall comply with Table R410.2.5. Viewing distance shall be measured as the horizontal distance between the character and an obstruction preventing further approach towards the sign. Character height shall be based on the uppercase letter "I".

Table R410.6 Visual Character Height

Height to Finish Surface from Baseline of Character	Horizontal Viewing Distance	Minimum Character Height
1.0 m (3.3 ft) to less than or equal to 1.8 m (5.8 ft)	Less than 1.8 m (6.0 ft)	16 mm (0.625 in)
	1.8 m (6.0 ft) and greater	16 mm (0.625 in), plus 3.2 mm (0.125 in) per 0.3 m (1.0 ft) of viewing distance above 1.8 m (6.0 ft)
Greater than 1.8 m (5.8 ft) to less than or equal to 3.0 m (10.0 ft)	Less than 4.6 m (15.0 ft)	51 mm (2 in)
	4.6 m (15.0 ft) and greater	16 mm (0.625 in), plus 3.2 mm (0.125 in) per 0.3 m (1.0 ft) of viewing distance above 1.8 m (6.0 ft)
Greater than 3.0 m (10.0 ft)	Less than 6.4 m (21.0 ft)	75 mm (3 in)
	6.4 m (21.0 ft) and greater	75 mm (3 in), plus 3.2 mm (0.125 in) per 0.3 m (1.0 ft) of viewing distance above 6.4 m (21.0 ft)

R410.7 Height from Finish Surface. Visual characters shall be 1.0 m (3.25 ft) minimum above the finish surface.

R410.8 Stroke Thickness. Stroke thickness of the uppercase letter "I" shall be 10 percent minimum and 30 percent maximum of the height of the character.

R410.9 Character Spacing. Character spacing shall be measured between the two closest points of adjacent characters, excluding word spaces. Spacing between individual characters shall be 10 percent minimum and 35 percent maximum of character height.

R410.10 Line Spacing. Spacing between the baselines of separate lines of characters within a message shall be 135 percent minimum and 170 percent maximum of the character height.

R411 International Symbol of Accessibility. The International Symbol of Accessibility shall comply with Figure 411. The symbol and its background shall have a non-glare finish. The symbol shall contrast with its background with either a light symbol on a dark background or a dark symbol on a light background.

Figure R411
International Symbol of Accessibility